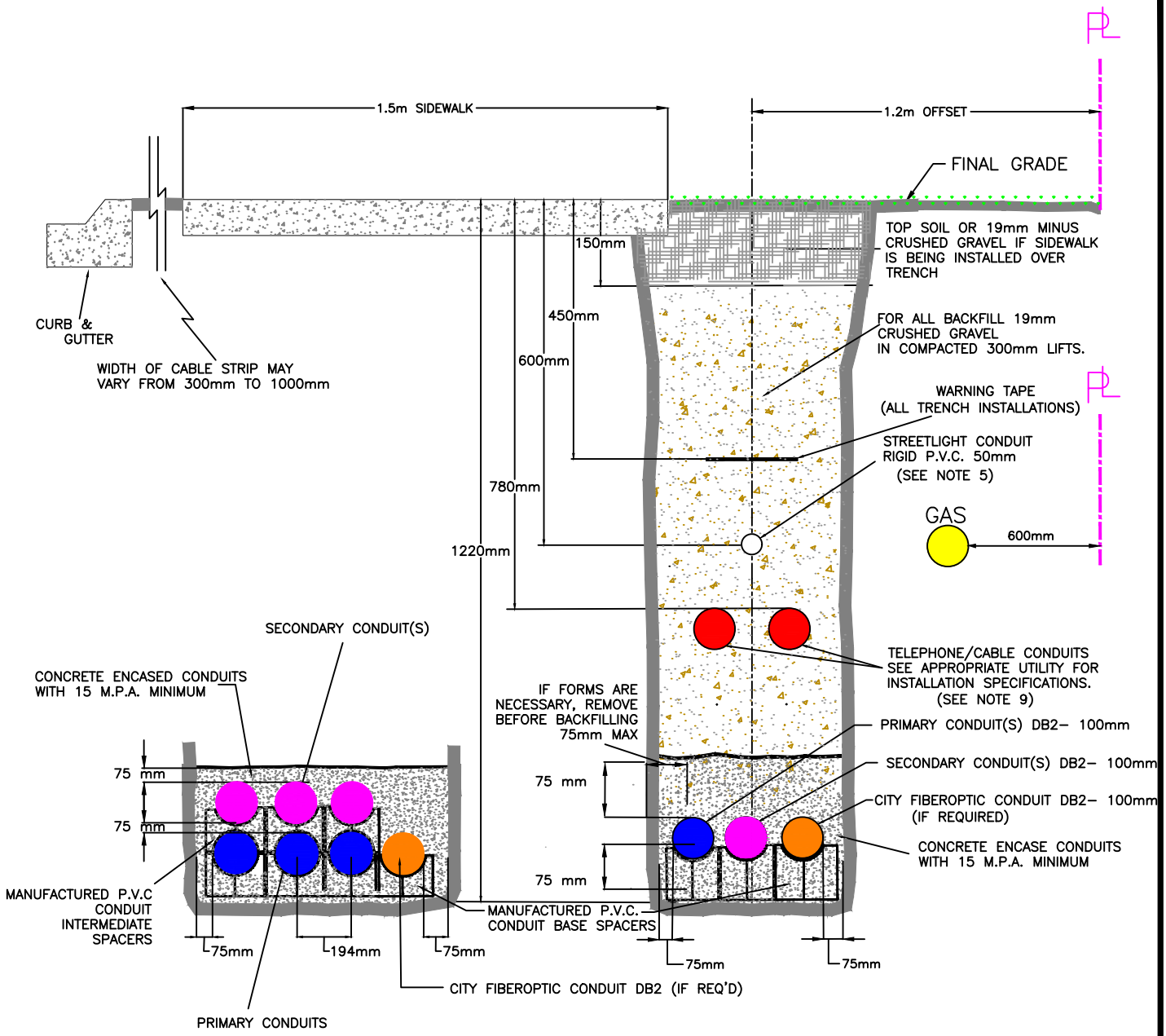

NOTES:

1. TRENCH BACKFILLED AND COMPACTED TO 95% OPTIMUM DRY DENSITY.
2. CONDUIT QUANTITY AND ARRANGEMENT TO BE DETERMINED BY CITY ELECTRIC UTILITY.
3. PULL TAPE ($\frac{7}{8}$" (22mm) FLAT BRAID POLYESTER – DCD NO. 58500–730) TO BE INSTALLED IN ALL CONDUIT.
4. PVC SPACERS TO BE INSTALLED EVERY 2m (FOR ALL NUMBER OF CONDUITS).
5. ALL CITY ELECTRICAL PRIMARY AND SECONDARY CONDUITS ARE TO BE CONCRETE ENCASED. ALL CITY STREETLIGHT CONDUITS ARE TO BE CONCRETE ENCASED UNDER ROADWAYS.
6. MANDREL TEST TO BE WITNESSED BY CITY REPRESENTATIVE FOR ALL INSTALLATIONS.
7. ALL ELECTRICAL DUCTS MUST BE INSPECTED BY CITY OF PENTICTON BEFORE CONCRETE ENCASEMENT.
8. SEE U–Q–1C FOR ADDITIONAL NOTES REGARDING THE TRENCH DETAIL.
9. COMMUNICATION CONDUITS (TELEPHONE/CABLE) TO BE COLOURED AS TO NOT BE MISTAKEN FOR COP CONDUIT. COLOUR TO BE DETERMINED BY CONDUIT OWNER.

DRAWN BY: N.C.R.	THE CITY OF Penticton	ELECTRIC UTILITY DISTRIBUTION STANDARDS
CHK'D. BY: J.S.	STANDARD TRENCH DETAIL CITY ELECTRICAL & FIBER, TELEPHONE & CABLE	
APP'D. BY:		
SCALE: N.T.S.	DATE: FEB. 2025 SEC. U-D	DWG.# 1

ENGINEER'S STAMP

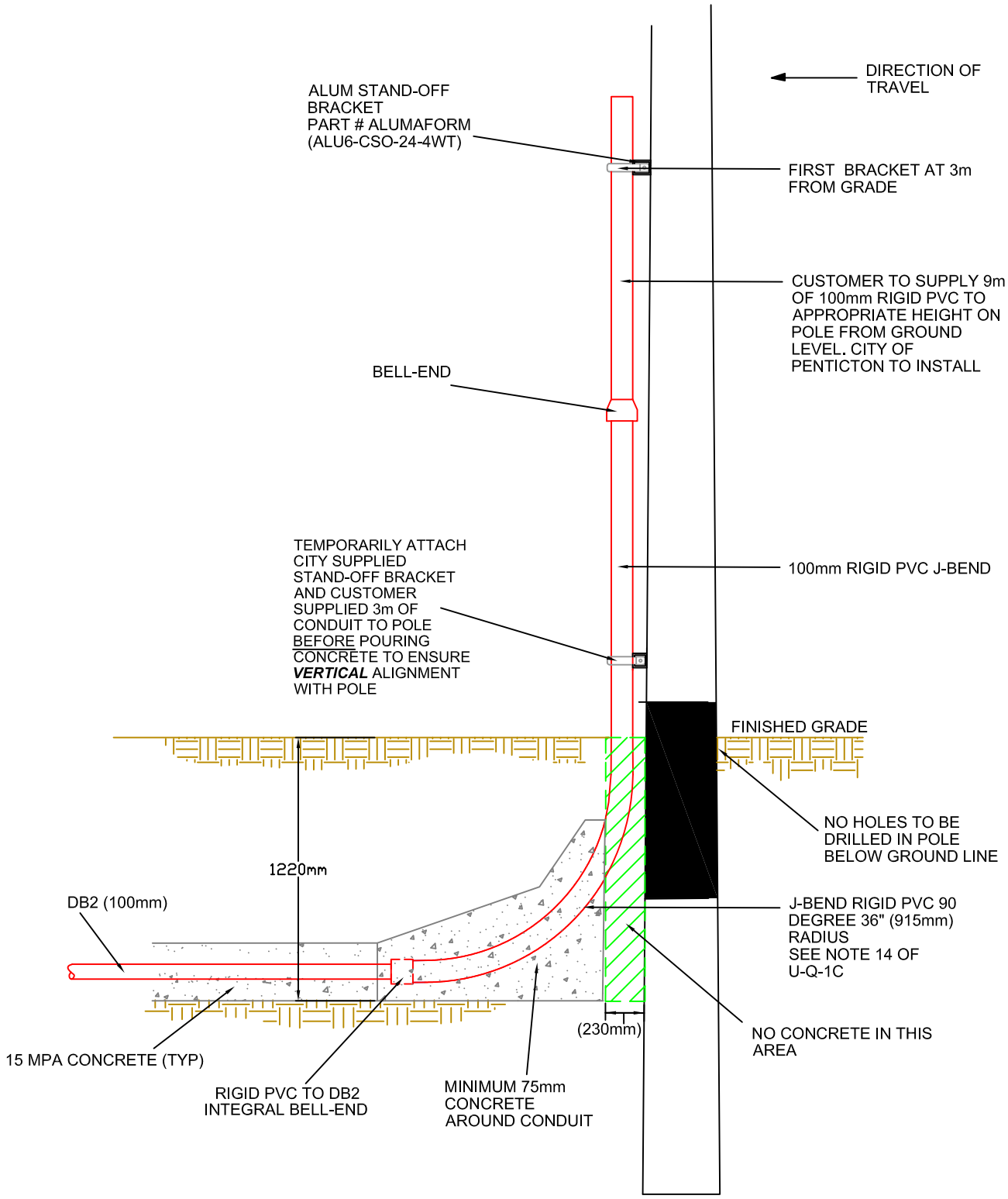

SEE ALSO:
U-Q-1B TYPICAL PRIMARY/SECONDARY POLE RISER (2 OF 3)
U-Q-1C TYPICAL PRIMARY/SECONDARY POLE RISER: NOTES (3 OF 3)

	DRAWN BY: Natasha Reimer	THE CITY OF Penticton	ELECTRIC UTILITY DISTRIBUTION STANDARDS	
	CHK'D. BY: J.S.	TYPICAL PRIMARY/SECONDARY POLE RISER (PART 1 OF 3)		
	APP'D. BY: S.F.			
ENGINEER'S STAMP	SCALE: N.T.S.	DATE: AUG 2019	SEC. U-Q	DWG.# 1A

CUSTOMER TO ARRANGE FOR CITY OF PENTICTON ELECTRICAL UTILITY REPRESENTATIVE TO MARK LOCATIONS OF CONDUIT ON POLE BEFORE PROCEEDING WITH ANY EXCAVATING (PHONE 250-490-2535). FAILURE TO DO SO MAY RESULT IN RELOCATION OF CONDUITS AT CUSTOMER'S EXPENSE.

SINGLE CONDUIT

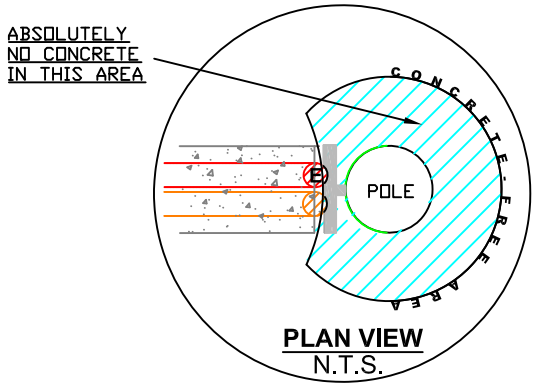

PLAN VIEW
N.T.S.

TOP VIEW

TRAFFIC FLOW

NOTE:
RED (AS WELL AS AS AN **E**) REPRESENTS CITY OWNED CONDUIT.
ORANGE REPRESENTS TELECOMMUNICATION CONDUIT.

MULTIPLE CONDUIT OPTION 1 - LAYOUT

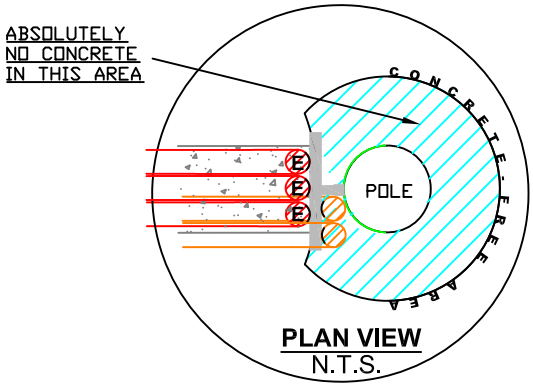

PLAN VIEW
N.T.S.

TOP VIEW

TRAFFIC FLOW

OFFSET BRACKET ON DEADEND TO AVOID DOWN GUY CONFLICT

MULTIPLE CONDUIT OPTION 2 - LAYOUT

FOR LIMITED BOULEVARD SPACE

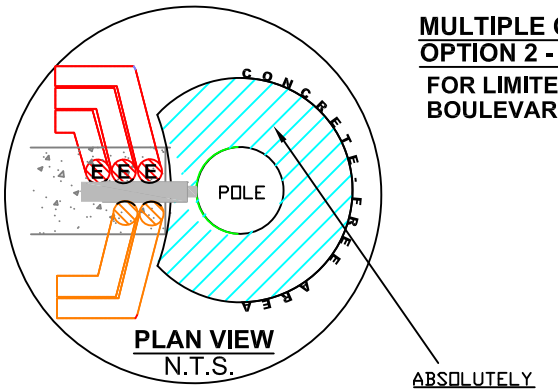

PLAN VIEW
N.T.S.

TOP VIEW

TRAFFIC FLOW

DUCTS TO BE PLACED AS CLOSE TO CENTRE LINE AS POSSIBLE

SEE ALSO:
U-Q-1A TYPICAL PRIMARY/SECONDARY POLE RISER (1 OF 3)
U-Q-1C TYPICAL PRIMARY/SECONDARY POLE RISER: NOTES (3 OF 3)

ENGINEER'S STAMP	DRAWN BY: Natasha Reimer	THE CITY OF Penticton	ELECTRIC UTILITY DISTRIBUTION STANDARDS	
	CHK'D. BY: J.S.	TYPICAL PRIMARY/SECONDARY POLE RISER (PART 2 OF 3)		
	APP'D. BY: S.F.			
	SCALE: N.T.S.	DATE: AUG 2019	SEC. U-Q	DWG.# 1B

NOTES:

1. THE CITY OF PENTICTON ELECTRIC UTILITY WILL MAKE THE FINAL DECISION REGARDING THE NUMBER, PLACEMENT AND TYPES OF CONDUIT TO BE PLACED ON THEIR POLES.
2. **CONTACT THE CITY OF PENTICTON ELECTRIC UTILITY @ 250-490-2535 TO ARRANGE FOR AN ELECTRICAL REPRESENTATIVE TO MARK CONDUIT ALIGNMENTS AND LOCATION OF STAND-OFF BRACKETS BEFORE PROCEEDING WITH ANY EXCAVATION. FAILURE TO DO SO MAY RESULT IN RELOCATION OF CONDUITS AT CUSTOMER'S EXPENSE.**
3. ALL ELECTRICAL DUCTS MUST BE INSPECTED BY THE CITY OF PENTICTON BEFORE CONCRETE ENCASEMENT.
4. ALL ELECTRICAL CONDUIT ON CITY OF PENTICTON POLES WILL BE RIGID PVC. WEATHERHEAD IS REQUIRED IF THE CONDUIT ENTERS ANY CUSTOMER OWNED EQUIPMENT.
5. ALWAYS PLACE A TEMPORARY SUPPORT BRACKET ON POLE BEFORE PROCEEDING WITH REMAINDER OF CONDUIT PLACEMENT TO ENSURE PROPER ALIGNMENT AND DEPTH AT POLE.
6. NO HOLES TO BE DRILLED IN POLE BELOW GROUND LINE.
7. IF PILASTER & LATERAL(S) ARE EXISTING ON POLE (SEE NOTE 2), THEN NEW CONDUITS WILL BE PLACED ON SAME SIDE AND AS CLOSE TO EXISTING AS POSSIBLE. UNDER NO CIRCUMSTANCES WILL THERE BE CONCRETE ON MORE THAN HALF THE CIRCUMFERENCE OF THE POLE OR ON MORE THAN 1 SIDE OF THE POLE.
8. NO CONCRETE ABOVE GRADE OR WITHIN 230mm OF EDGE OF THE POLE.
9. INSTALL PULL TAPE (22mm ($\frac{7}{8}$") FLAT BRAID POLYESTER - DCD 58500-730) IN ALL CITY OWNED ELECTRICAL CONDUIT(S).
10. CUSTOMERS WILL ENSURE THAT ALL WORK DONE FOR THE CITY OF PENTICTON ELECTRIC UTILITY IS DONE AS PER THE LATEST STANDARDS. FAILURE TO DO SO WILL RESULT IN WORK BEING CORRECTED AT CUSTOMER'S EXPENSE.
11. IN THE EVENT OF CONFLICTS WITH OTHER UTILITIES, CONTACT THE CITY OF PENTICTON ELECTRIC UTILITY.
12. MANDREL TEST TO BE WITNESSED BY CITY REPRESENTATIVE FOR ALL CITY OWNED CONDUIT INSTALLATIONS.
13. ALL BACKFILL TO BE 19mm MINUS CRUSHED GRAVEL UP TO TOPSOIL OR ASPHALT/CONCRETE.
14. **SCHEDULE F - CITY OF PENTICTON TRAFFIC BYLAW #94-39 APPLICATION IS REQUIRED BEFORE ANY WORK IS DONE WITHIN THE PUBLIC RIGHT OF WAY.**
15. ALL BENDS MUST BE 36" RADIUS UNLESS APPROVED BY A CITY REPRESENTATIVE

SEE ALSO:
U-Q-1A TYPICAL PRIMARY/SECONDARY POLE RISER (1 OF 3)
U-Q-1B TYPICAL PRIMARY/SECONDARY POLE RISER (2 OF 3)

ENGINEER'S STAMP	DRAWN BY: Natasha Reimer	THE CITY OF Penticton	ELECTRIC UTILITY DISTRIBUTION STANDARDS	
	CHK'D. BY: J.S.	TYPICAL PRIMARY/SECONDARY POLE RISER NOTES (PART 3 OF 3)		
	APP'D. BY: S.F.			
	SCALE: N.T.S.	DATE: AUG 2019	SEC. U-Q	DWG.# 1C

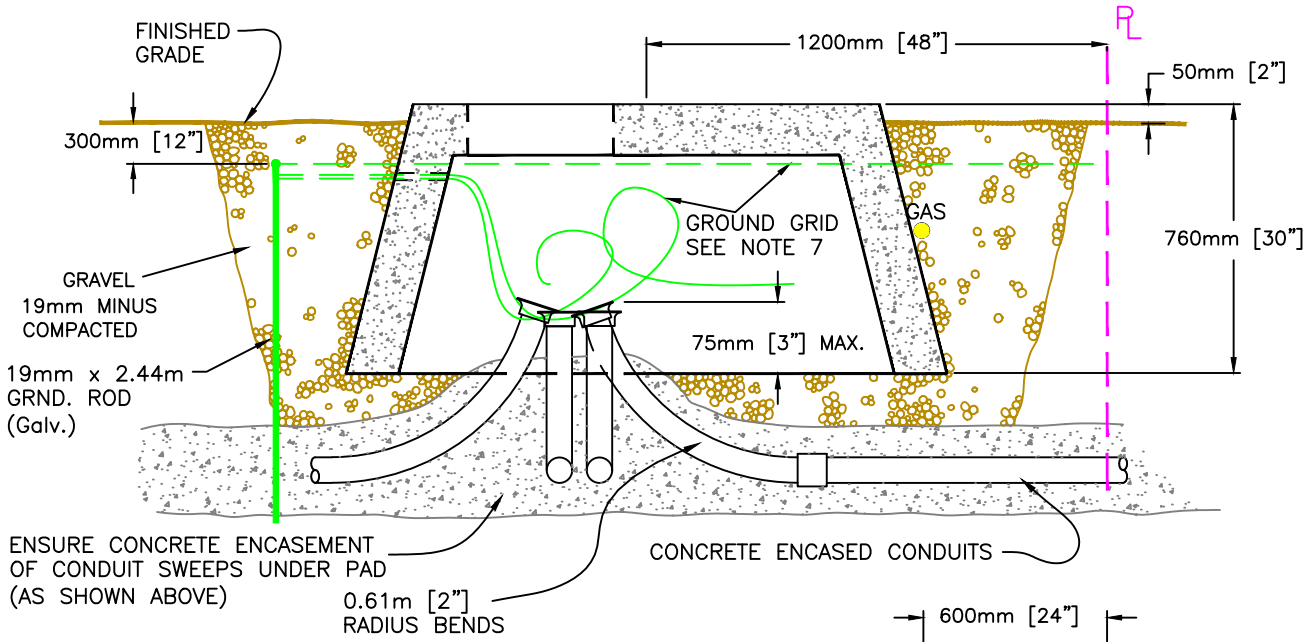

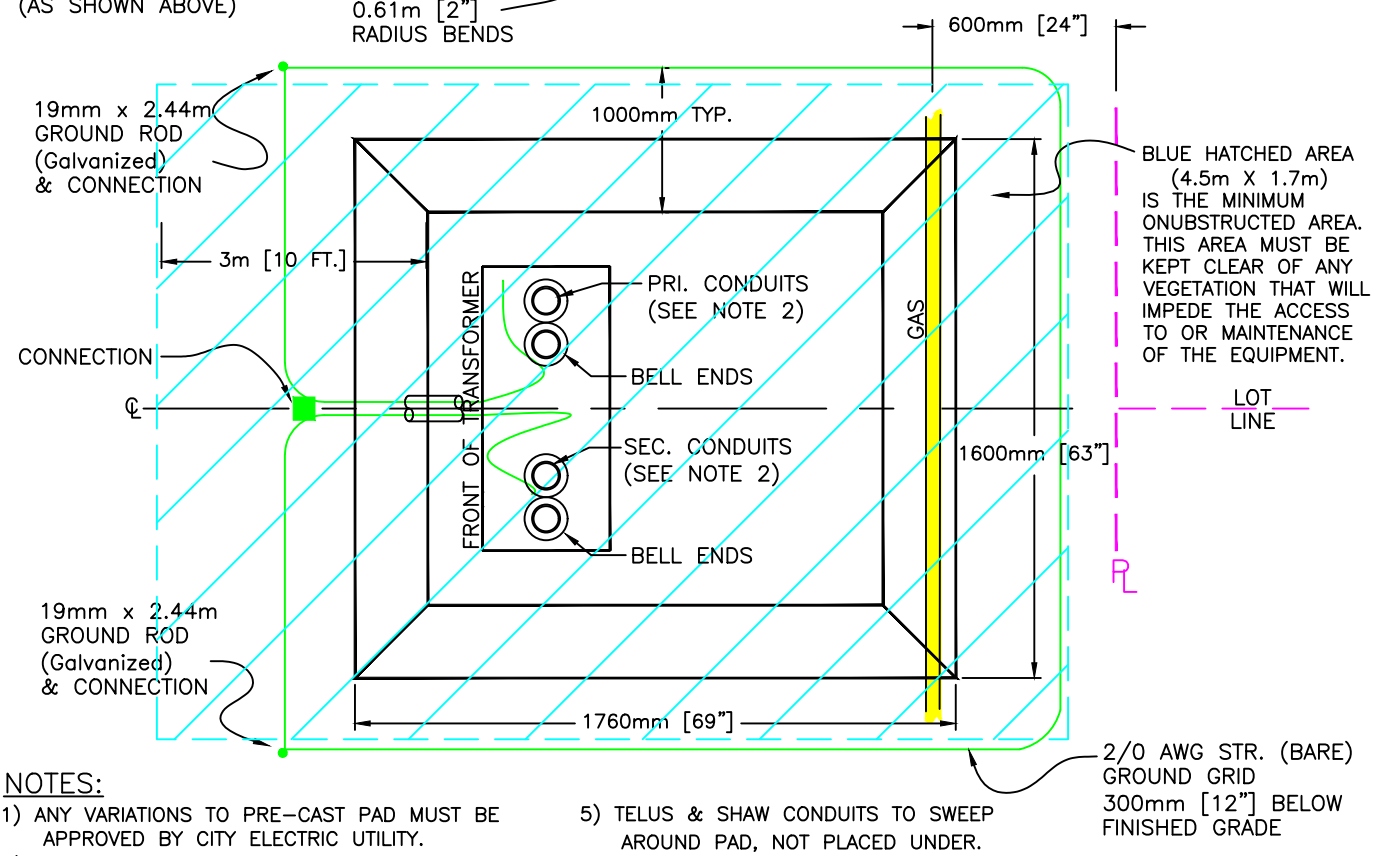

NOTES:

1) ANY VARIATIONS TO PRE-CAST PAD MUST BE APPROVED BY CITY ELECTRIC UTILITY.
2) CONDUIT SIZE AND QUANTITY TO BE DETERMINED BY ELECTRIC UTILITY. ALL CONDUITS TO HAVE BELL ENDS INSTALLED.
3) ALL CONDUCTORS AT PAD TO REACH A MINIMUM 2.0 METERS ABOVE PAD.
4) PULL STRINGS TO BE INSTALLED IN ALL DUCTS (MCM #8 HYDRO TWINE – BCH SPEC 106-0420 R2)
5) TELUS & SHAW CONDUITS TO SWEEP AROUND PAD, NOT PLACED UNDER.
6) ENSURE THAT PAD IS LEVEL IN ALL PLANES. THIS APPLIES TO ALL INSTALLATIONS (REGARDLESS OF SURROUNDING GRADE).
7) APPROX. 20m OF ⅔ AWG STR. COPPER WILL BE REQUIRED FOR ENTIRE GROUND GRID.

*SEE U-V1-1A FOR PRE-CAST PAD SPECIFICATIONS.
*SEE U-EB-1 FOR PLACEMENT OF BOLLARDS IF REQUIRED.

ENGINEER'S STAMP	DRAWN BY: N.C.R	THE CITY OF Penticton — ELECTRIC UTILITY DISTRIBUTION STANDARDS
	CHK'D. BY:	1 PHASE PADMOUNT TRANSFORMER PAD INSTALLATION DETAILS
	APP'D. BY:	
	SCALE: N.T.S.	DATE: FEB 2024 · SEC. U-V1 · DWG.# 1

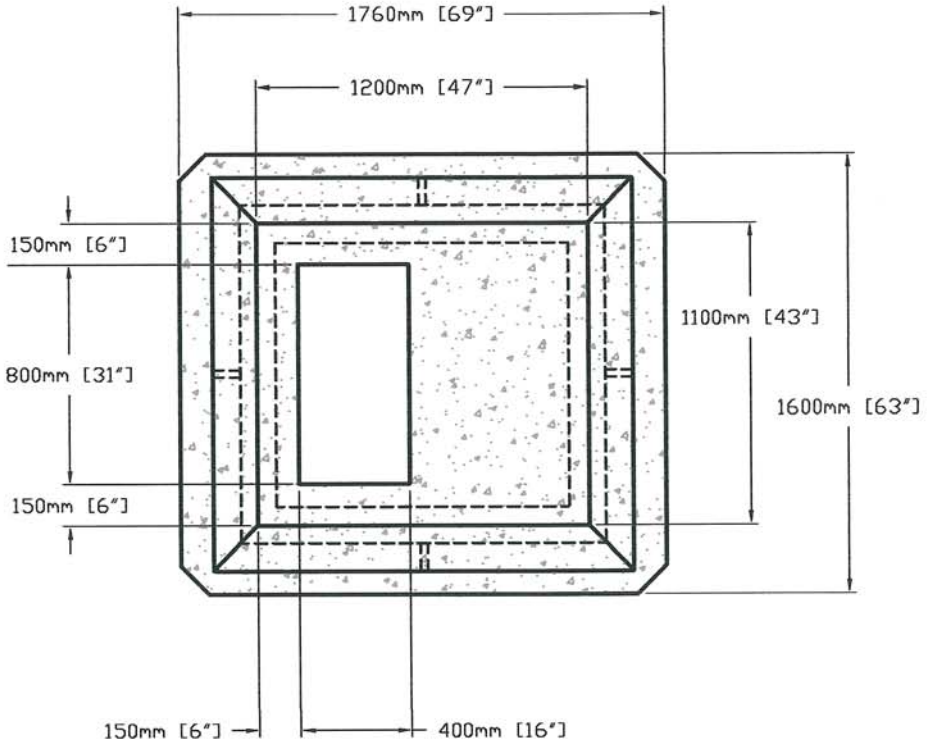

PLAN VIEW

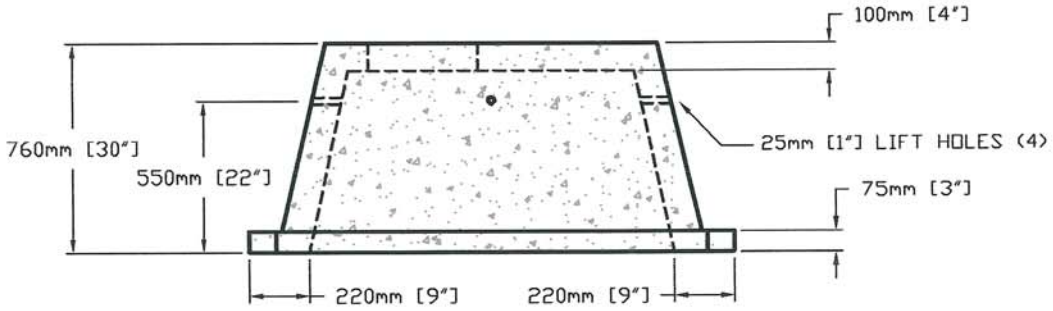

SIDE ELEVATION

TRANSFORMER PAD AS PER:
DRAWING #1059
DOUBLE R PRECAST (2000)
15823 LOGIE RD.
SUMMERLAND, B.C.
V0H 1Z0

*SEE U-V1-1 FOR INSTALLATION DETAILS.

PROFESSIONAL ENGINEER — PROVINCE OF BRITISH COLUMBIA — T. E. BURNS

ENGINEER'S STAMP

DRAWN BY:	E.G.H.
CHK'D. BY:	T.W.A.
APP'D. BY:	T.E.B.
SCALE:	N.T.S.

THE CITY OF Penticton

ELECTRIC UTILITY
DISTRIBUTION STANDARDS

1 PHASE
PADMOUNT TRANSFORMER PAD
SPECIFICATIONS

DATE: NOV. 2004 | SEC. U-V1 | DWG.# 1A

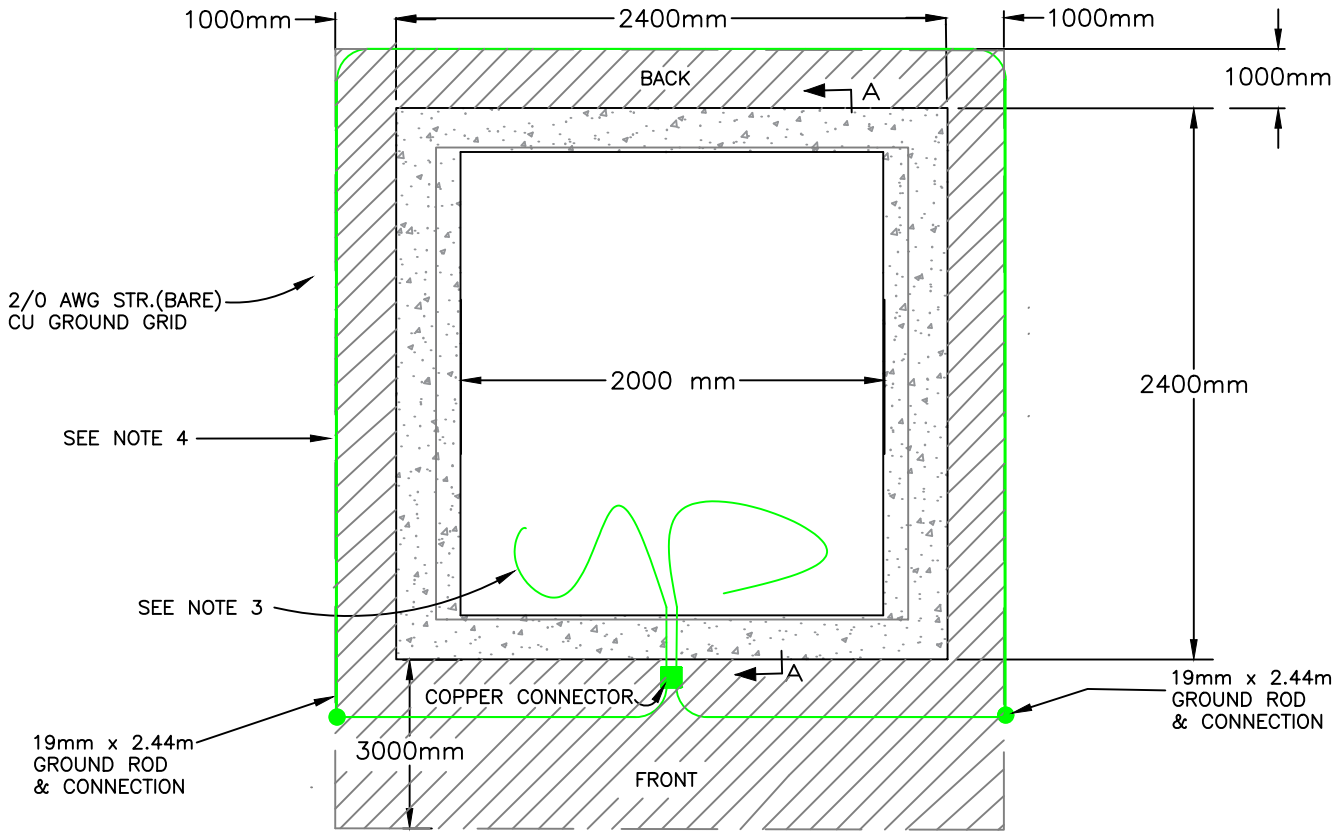

PLAN VIEW

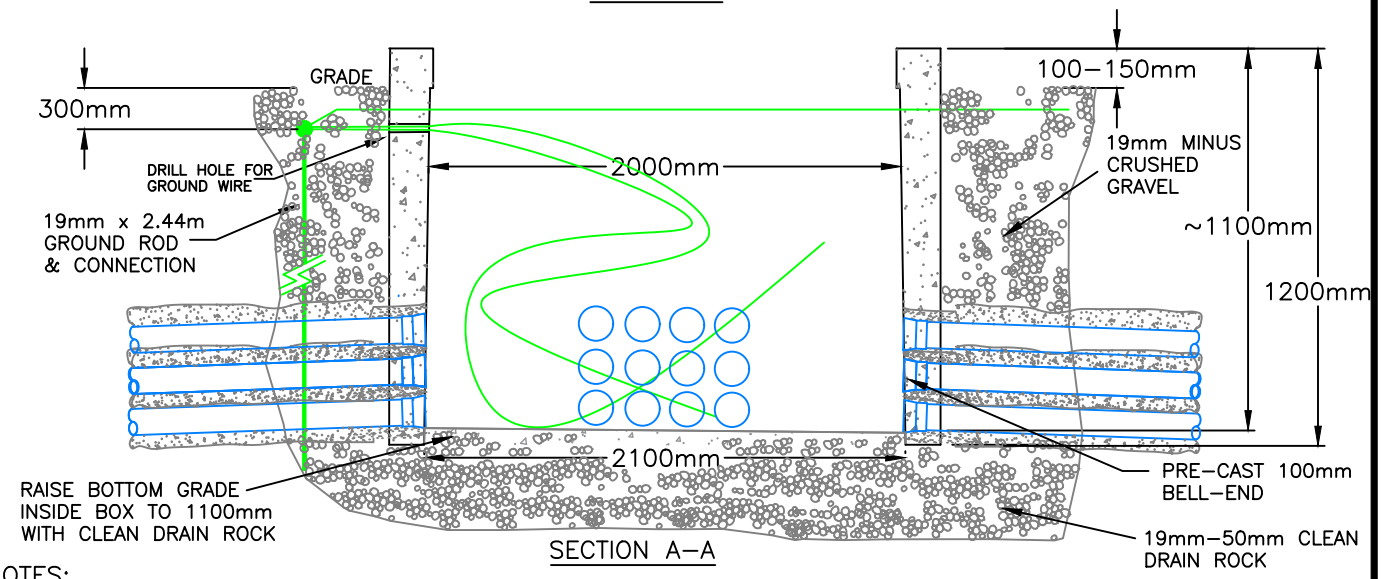

SECTION A–A

NOTES:

1) BASE – KON KAST (DWG #1066)
   SWITCHER BASE, COP (DWG #U–S–1)
2) CONDUIT QUANTITY, SIZE AND ORIENTATION TO BE DETERMINED BY CITY ELECTRIC UTILITY.
3) 2/0 AWG BARE CU GROUNDING CONDUCTOR. EACH END TO EXTEND MIN. 2m INSIDE BOX. TOTAL GROUND GRID LENGTH IS ~24m.
4) ENSURE A BUFFER AREA OF 1m ALONG SIDES AND 3m IN FRONT OF DOORS BE MAINTAINED
5) LID TO BE CHOSEN AS PER APPLICATION
   (SEE: U–V3–2 75–500KVA ADAPTOR PLATE
   U–V3–3 750–3000KVA ADAPTOR PLATE
   U–V3–4 2000KVA ADAPTOR PLATE
   U–S–1 SWITCHGEAR ADAPTOR PLATE)

ENGINEER'S STAMP	DRAWN BY: Natasha Reimer	THE CITY OF Penticton	ELECTRIC UTILITY DISTRIBUTION STANDARDS
	CHK'D. BY: J.S.	3 PHASE PADMOUNT TRANSFORMER/SWITCHGEAR BASE INSTALLATION DETAILS	
	APP'D. BY: S.F.		
	SCALE: N.T.S.	DATE: REVISED APR 2025	SEC. U-V3 / DWG.# 1

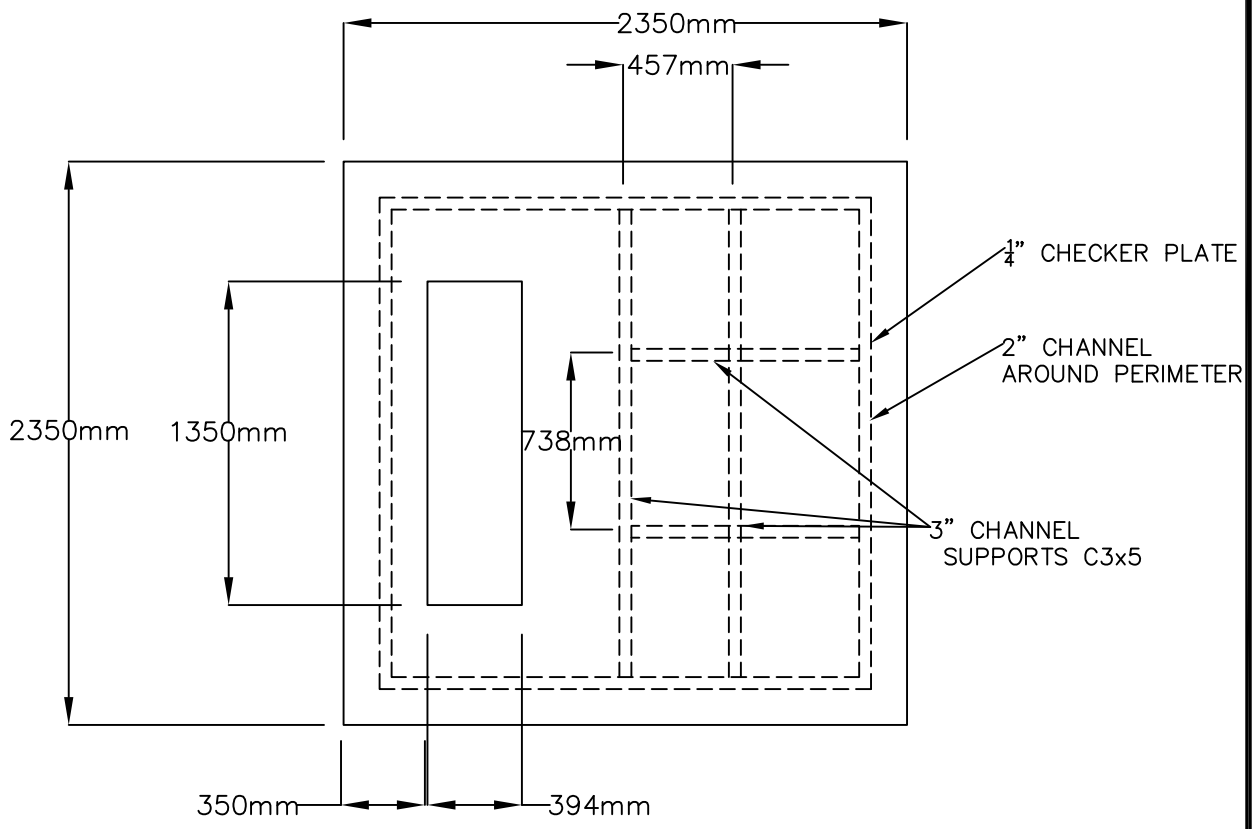

75–500 KVA (with
EXCEPTIONS) ADAPTOR PLATE

FOR
75–300KVA LF 95BIL
75–500KVA R/LF 125BIL

NOT FOR
75, 150KVA R 95BIL

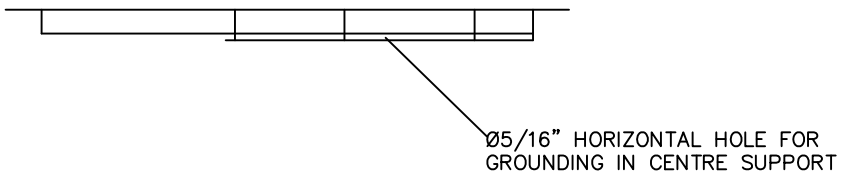

9000LBS (4090kg)
TRANSFORMER

NOTES:
1) WEIGHT = 775LBS
(353KG)
2) POLYMER COATED

ENGINEER'S STAMP	DRAWN BY: Natasha Reimer	THE CITY OF Penticton	ELECTRIC UTILITY DISTRIBUTION STANDARDS	
	CHK'D. BY:	75-500 KVA ADAPTOR PLATE (ADAPTOR LID)		
	APP'D. BY:			
	SCALE:	DATE: JUL. 2019	SEC. U-V3	DWG.# 2

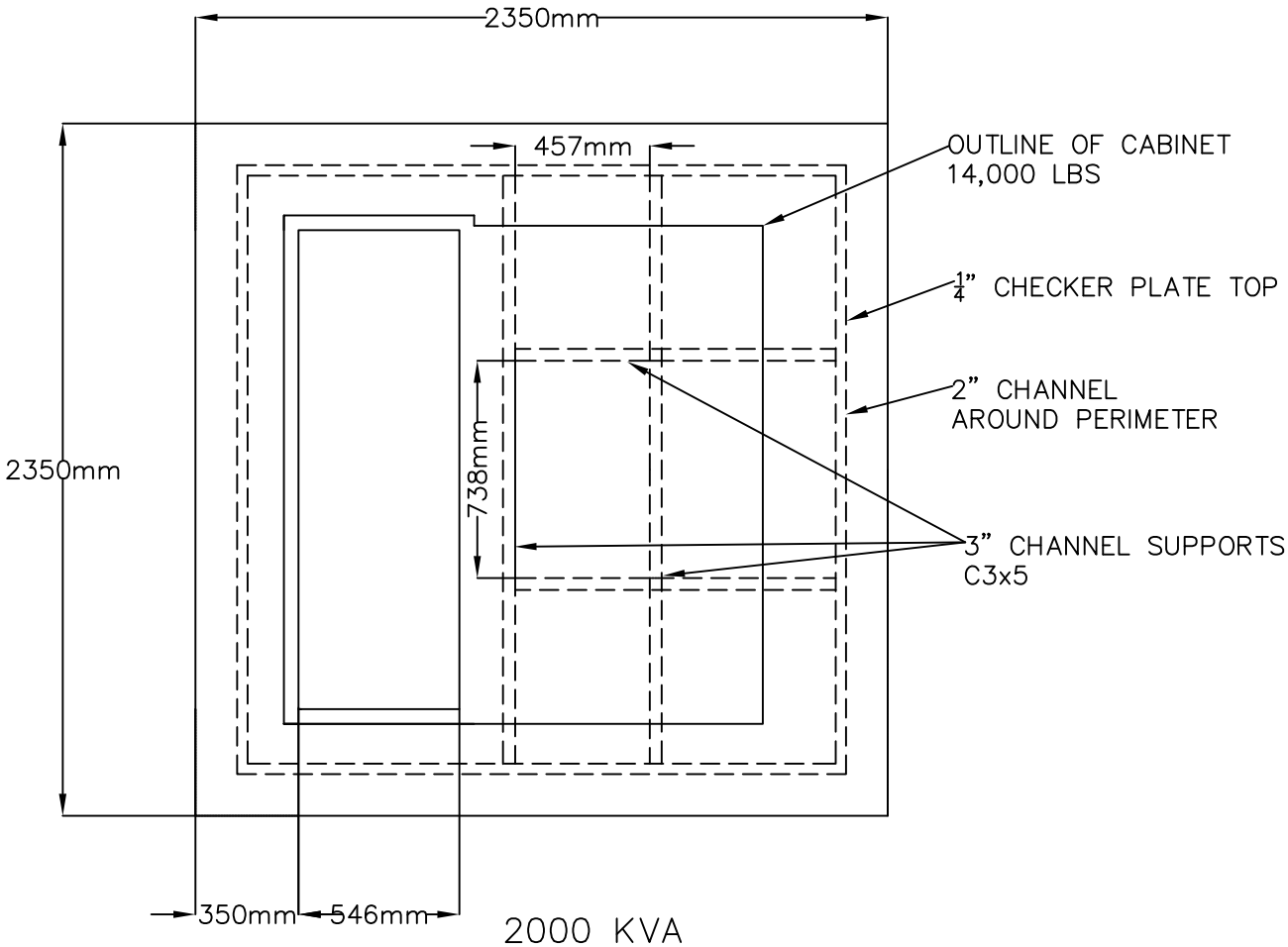

2000 KVA
ADAPTOR PLATE

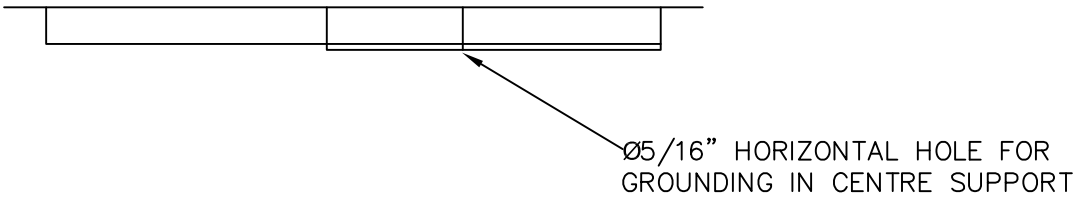

14,000LBS (6364KG)
TRANSFORMER

NOTES:
1) WEIGHT = 775 LBS (353KG)
2) POLYMER COATED

ENGINEER'S STAMP	DRAWN BY: Natasha Reimer	THE CITY OF Penticton	ELECTRIC UTILITY DISTRIBUTION STANDARDS		
	CHK'D. BY:	2000 KVA ADAPTOR PLATE (ADAPTOR LID)			
	APP'D. BY:				
	SCALE:	DATE: JUL. 2019	SEC. U-V3	DWG.# 4	

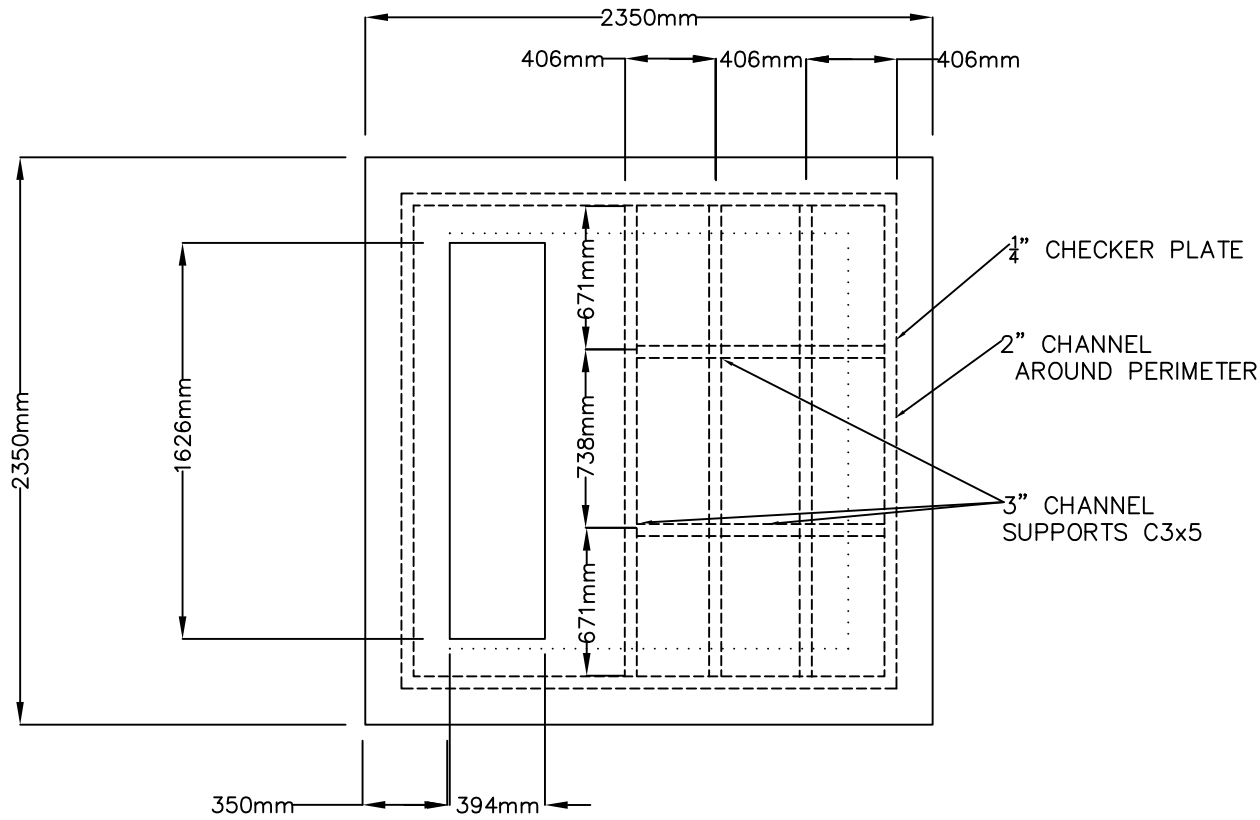

750–3000 KVA RADIAL OR
LF CSA spec
TRANS.ADAPTOR PLATE

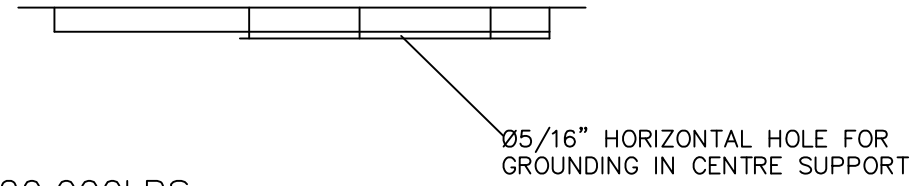

NOTES:
1) WEIGHT = 775LBS (353KG)
2) POLYMER COATED

20,000LBS
(9090kg)
TRANSFORMER

ENGINEER'S STAMP	DRAWN BY: Natasha Reimer	THE CITY OF Penticton	ELECTRIC UTILITY DISTRIBUTION STANDARDS	
	CHK'D. BY:	750-3000 KVA ADAPTOR PLATE (ADAPTOR LID)		
	APP'D. BY:			
	SCALE:	DATE: JULY 2019	SEC. U-V3	DWG.# 3

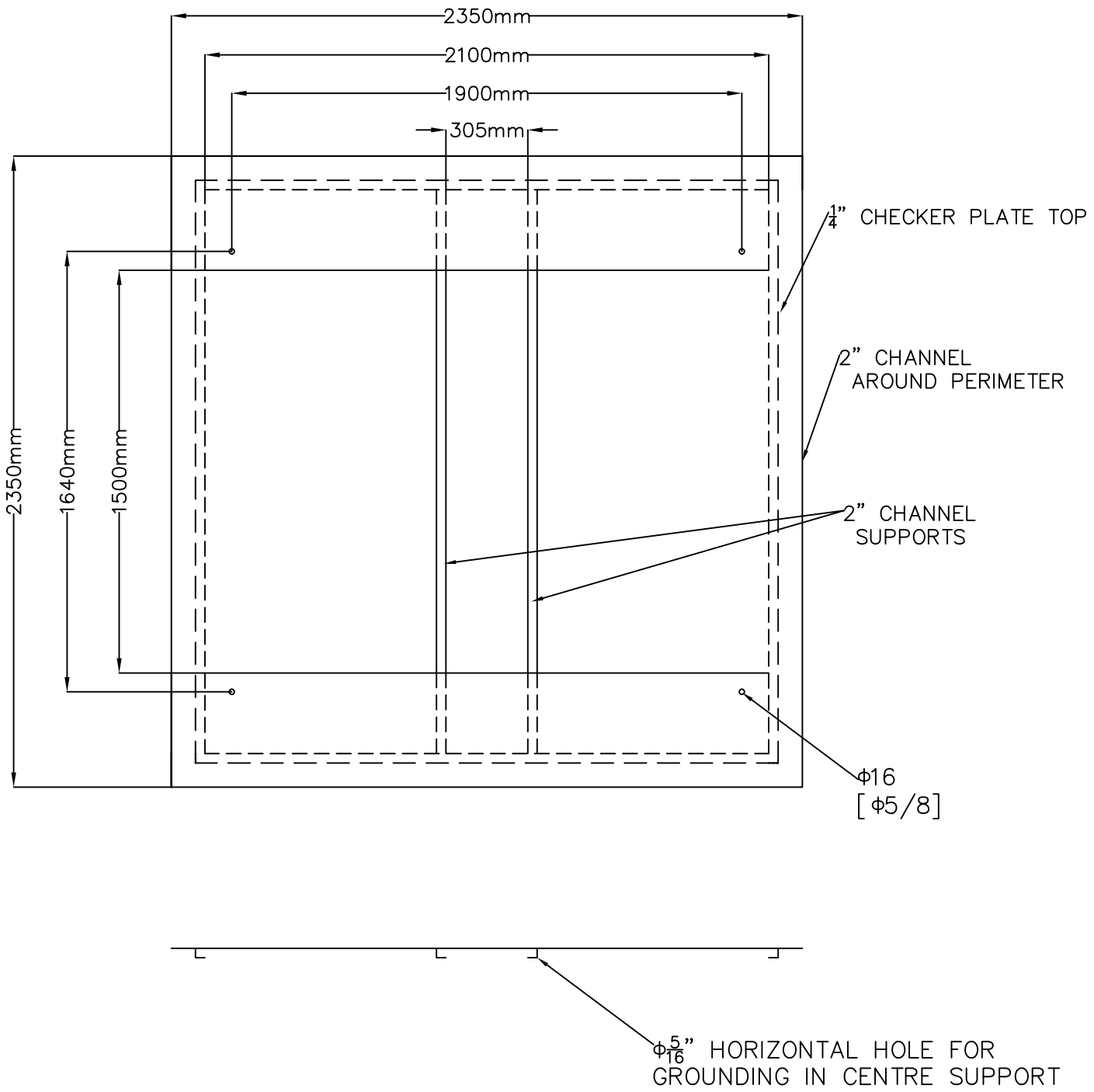

NOTES:

1) WEIGHT = 395LBS (179KG)
2) POLYMER COATED

ENGINEER'S STAMP	DRAWN BY: Natasha Reimer	THE CITY OF Penticton	ELECTRIC UTILITY DISTRIBUTION STANDARDS	
	CHK'D. BY:	15/25 KV ADAPTOR PLATE (COOPER SWITCHGEAR ADAPTOR LID) (FORTIS #755-0618)		
	APP'D. BY: SF			
	SCALE:	DATE: AUG. 2019	SEC. U-S	DWG.# 1

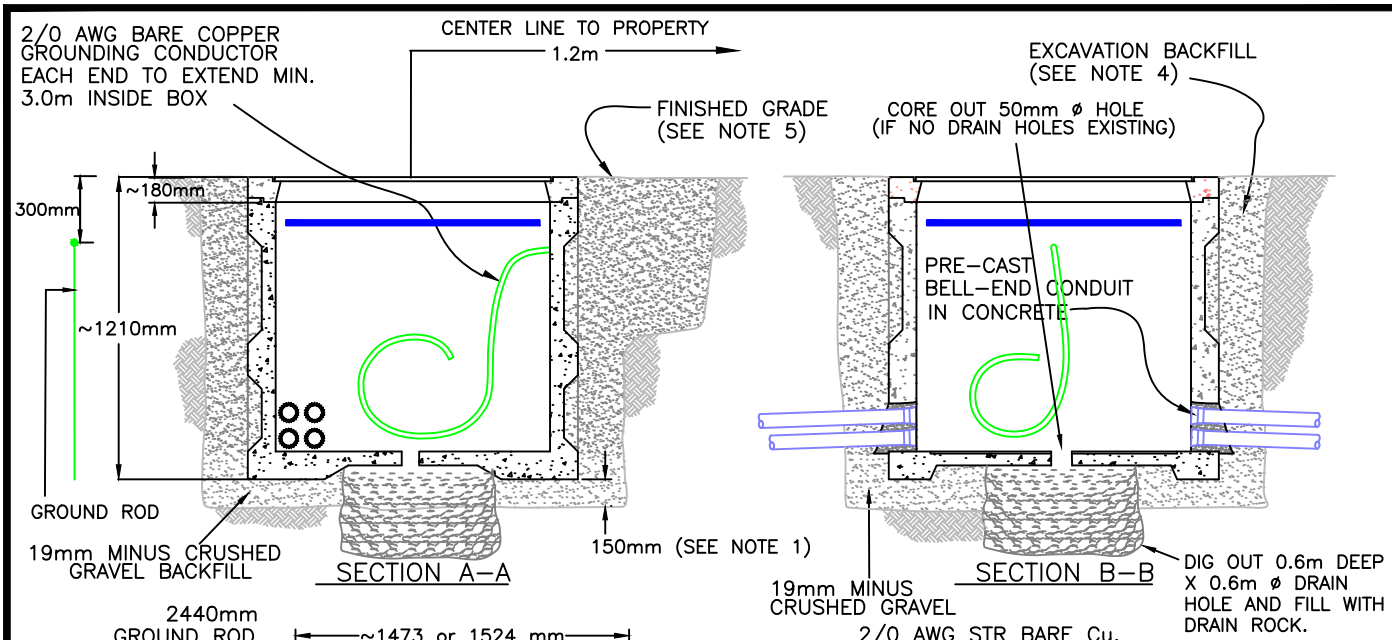

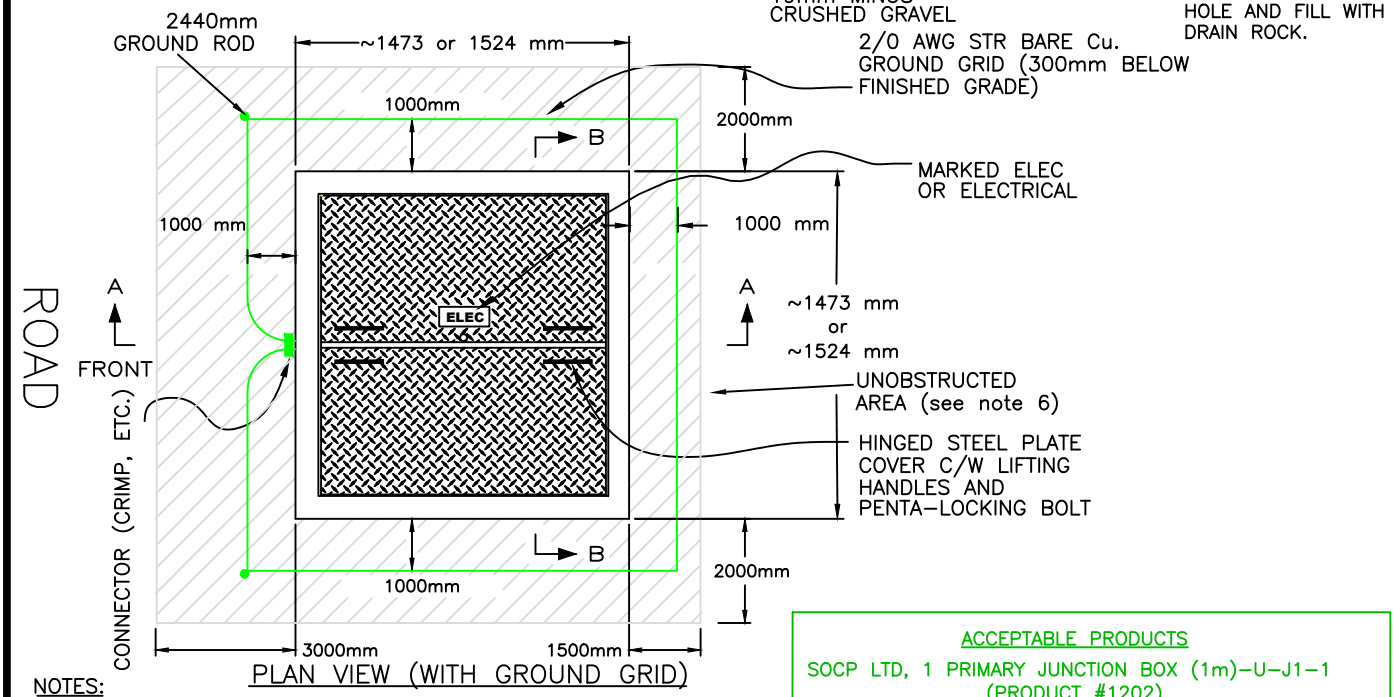

ACCEPTABLE PRODUCTS

SOCP LTD, 1 PRIMARY JUNCTION BOX (1m)-U-J1-1 (PRODUCT #1202)

NOTES:

1. ESTABLISH BASE WITH 19mm MINUS CRUSHED GRAVEL TO ENSURE THAT TOP OF VAULT MATCHES FINISHED GRADE.
2. INSTALL THE CONDUITS INTO THE PRE-CAST BELL-ENDS
3. INSTALL GROUNDING CONNECTOR AND GROUND RODS AS SHOWN.
4. BACKFILL THE EXCAVATION AND COMPACT 300mm LIFTS USING 19mm MINUS CRUSHED GRAVEL.
5. RESTORE THE SURFACE AT FINISHED GRADE AS REQUIRED IN SPECIFICATIONS.
6. THE DIMENSIONS OF THE UNOBSTRUCTED AREA ARE MINIMUM CLEARANCES. ANY VEGETATION ON THIS AREA MUST BE OF THE TYPE THAT CAN BE TRIMMED ANNUALLY TO MAINTAIN CLEARANCES. THE UNOBSTRUCTED AREA ALLOWS ACCESS FOR OPERATING PERSONNEL
7. CONTACT ELECTRIC UTILITY TO ENSURE PROPER VAULT INSTALLATION & ORIENTATION OF COLLAR & LID.
8. ENSURE THAT VAULT IS LEVEL FRONT TO BACK.
9. ENSURE THAT DRAIN HOLE IS CORED OUT AND IS LOCATED ON THE DOWN SLOPE END OF THE VAULT.
10. VAULT TO BE INSTALLED LENGTHWISE PARALLEL TO CURB UNLESS OTHERWISE SPECIFIED [FOLLOWING GRADE IF DIFFERENCE IN ELEVATION < 1FT. (0.3m)].

    IF DIFFERENCE BETWEEN ENDS > 1 FT., THEN CONTACT ELEC. UTILITY. RETAINING STRUCTURE SHOULD BE BUILT OUTSIDE CLEARANCE AREAS
11. PULL TAPE TO BE INSTALLED IN ALL CONDUIT (⅞" (22mm) FLAT BRAID POLYESTER – DCD NO. 58500-730).
12. ALL CONDUIT INSTALLED SUBJECTED TO MANDREL TEST WITNESSED BY CITY REPRESENTATIVE FOR ALL INSTALLATIONS

ENGINEER'S STAMP	DRAWN BY: Natasha Reimer	THE CITY OF Penticton	ELECTRIC UTILITY DISTRIBUTION STANDARDS
	CHK'D. BY: J.S.	1 PHASE PRIMARY JUNCTION BOX INSTALLATION DETAILS	
	APP'D. BY: S.F.		
	SCALE: N.T.S.	DATE: R JUL 2019	SEC. U-J1	DWG.# 1

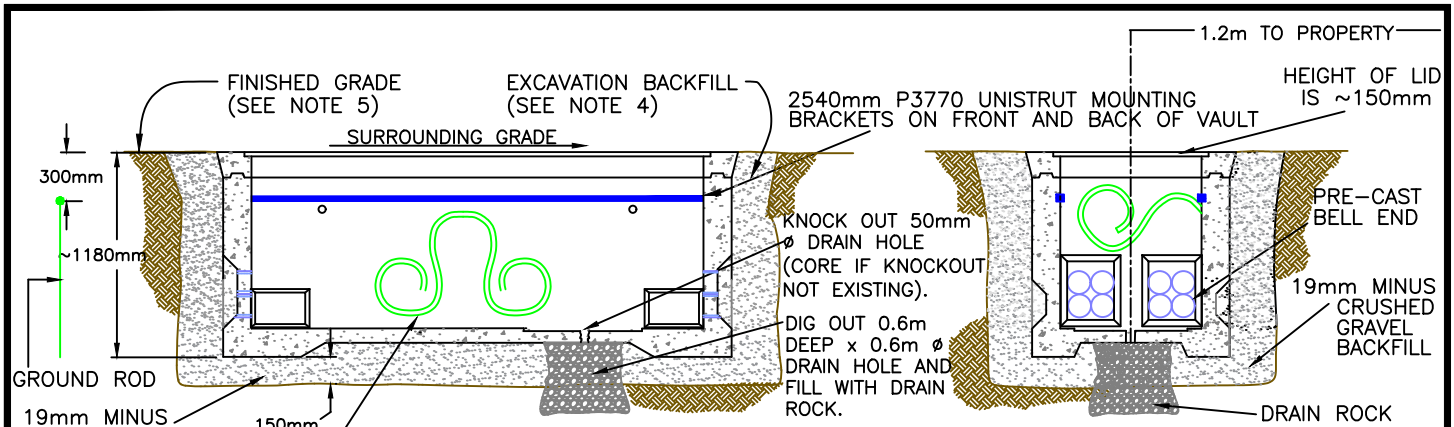

SECTION A–A

SECTION B–B

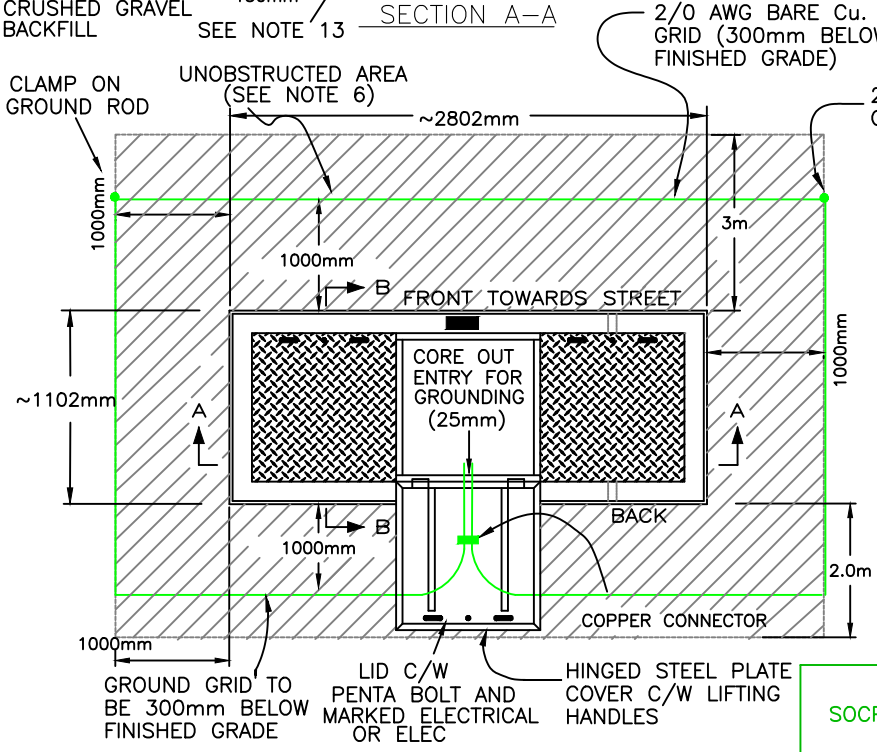

PLAN VIEW (WITH GROUND GRID)

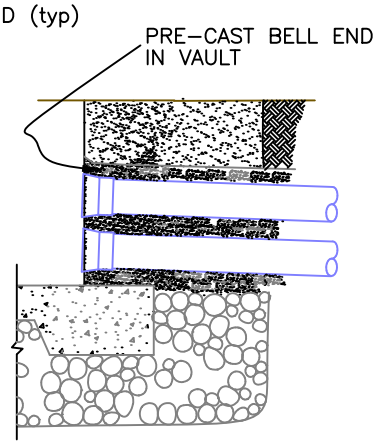

CONDUIT ENTRANCE DETAIL

ACCEPTABLE PRODUCTS

SOCP LTD, 3 PHASE PRIMARY JUNCTION BOX (832) – U–J3–1 (SOCP PRODUCT #1210)

KON KAST, FORTIS 832 JUNCTION VAULT (#1032) (REQUEST BELL ENDS INSTEAD OF KNOCKOUTS)

NOTES:

1. ESTABLISH BASE WITH 19mm MINUS CRUSHED GRAVEL TO ENSURE THAT TOP OF VAULT MATCHES FINISHED GRADE.
2. INSTALL THE CONDUITS INTO THE PRE–CAST BELL ENDS
3. INSTALL GROUNDING CONNECTOR AND GROUND RODS AS SHOWN.
4. BACKFILL THE EXCAVATION AND COMPACT 300mm LIFTS USING 19mm MINUS CRUSHED GRAVEL.
5. RESTORE THE SURFACE AT FINISHED GRADE AS REQUIRED IN SPECIFICATIONS.
6. THE DIMENSIONS OF THE UNOBSTRUCTED AREA ARE MINIMUM CLEARANCES. ANY VEGETATION ON THIS AREA MUST BE OF THE TYPE THAT CAN BE TRIMMED ANNUALLY TO MAINTAIN CLEARANCES. THE UNOB–STRUCTED AREA ALLOWS ACCESS FOR OPERATING PERSONNEL.
7. CONTACT ELECTRIC UTILITY TO ENSURE PROPER VAULT INSTALLATION & ORIENTATION OF COLLAR & LID. (COLLAR & LID CAN BE ROTATED ON VAULT BASE).
8. ENSURE THAT VAULT IS LEVEL FRONT TO BACK.
9. ENSURE THAT DRAIN HOLE IS CORED OUT AND IS LOCATED ON THE DOWN SLOPE END OF THE VAULT.
10. VAULT TO BE INSTALLED LENGTHWISE PARALLEL TO CURB UNLESS OTHERWISE SPECIFIED [FOLLOWING GRADE IF DIFFERENCE IN ELEVATION < 1FT. (0.3m)].

    **IF DIFFERENCE BETWEEN ENDS > 1 FT., THEN CONTACT ELEC. UTILITY. RETAINING STRUCTURE SHOULD BE BUILT OUTSIDE CLEARANCE AREAS*
11. PULL TAPE TO BE INSTALLED IN ALL CONDUIT (7/8" FLAT BRAID POLYESTER – DCD NO. 58500–730).
12. ALL CONDUIT INSTALLED SUBJECTED TO MANDREL TEST WITNESSED BY CITY REPRESENTATIVE FOR ALL INSTALLATIONS
13. 2/0 AWG BARE COPPER GROUNDING CONDUCTOR. EACH END TO EXTEND MIN. 4.5M INSIDE BOX. TOTAL GROUND GRID LENGTH IS ~27m.

ENGINEER'S STAMP	DRAWN BY: Natasha Reimer	THE CITY OF Penticton	ELECTRIC UTILITY DISTRIBUTION STANDARDS
	CHK'D. BY: J.S.	3 PHASE PRIMARY JUNCTION BOX (TYPE 832) INSTALLATION DETAILS	
	APP'D. BY:		
	SCALE: N.T.S.	DATE: OCT 2025 / SEC. U-J3	DWG.# 1

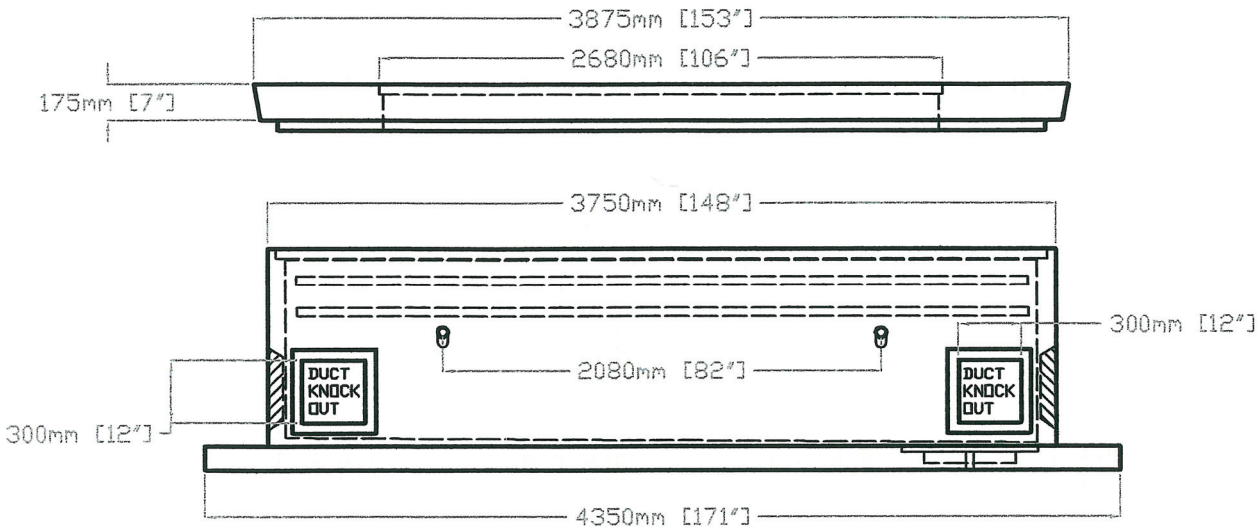

SIDE VIEW - VAULT AND COLLAR

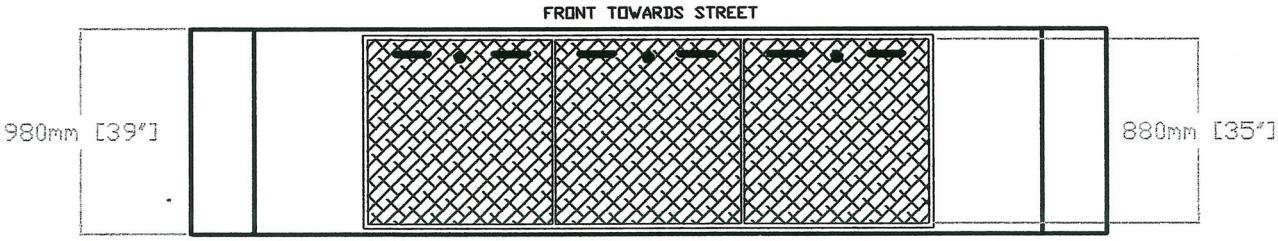

PLAN VIEW - COLLAR, VAULT & LID

* See U–J3–2A for installation details.
* See U–J3–2B for ground grid & onubstructed area.
* See U–J3–2C for cabling detail.
* See U–J3–2D for photos of installation.

NOTES:
1. Weight of Vault is approx. 3318 Kg (7300 Lbs.).
2. Weight of Collar & Lid is approx. 1295 Kg. (2850 Lbs.).
3. Total weight of Vault, Collar & Lid is approx. 4613Kg (10,150 Lbs.).

ACCEPTABLE PRODUCTS

A.E. CONCRETE PRECAST PRODUCTS LTD., SURREY
HYDRO 1232 JCT. VAULT & COLLAR
(BCH DRAWING #ES54 D4–02.01)

PROFESSIONAL ENGINEER — PROVINCE OF BRITISH COLUMBIA — T. E. BURNS

ENGINEER'S STAMP

DRAWN BY:	E.G.H.	THE CITY OF Penticton	ELECTRIC UTILITY DISTRIBUTION STANDARDS
CHK'D. BY:	T.W.A.	3 PHASE PRIMARY JUNCTION BOX (TYPE 1232)	
APP'D. BY:	T.E.B.		
SCALE:	N.T.S.	DATE: JAN. 2007	SEC. U-J3	DWG.# 2

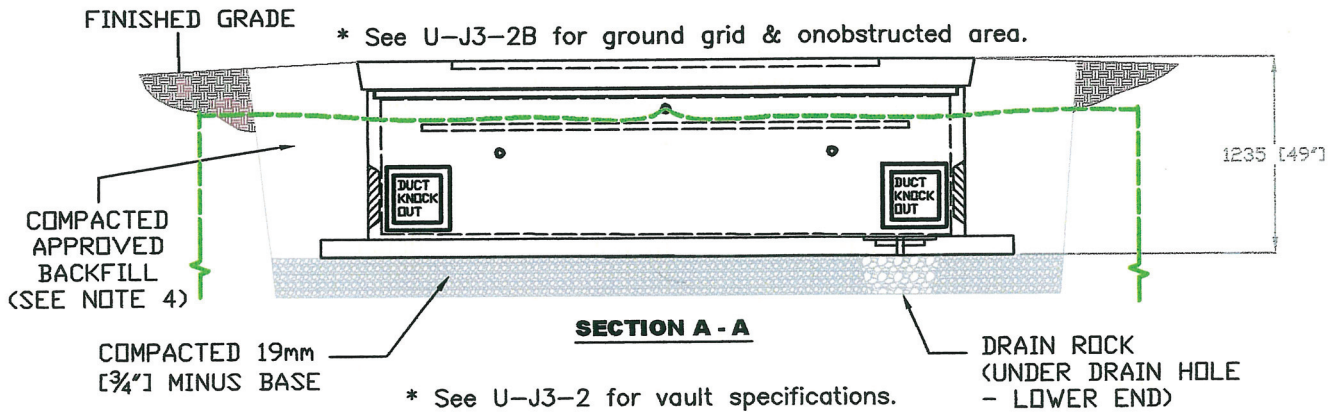

SECTION A - A

* See U-J3-2 for vault specifications.

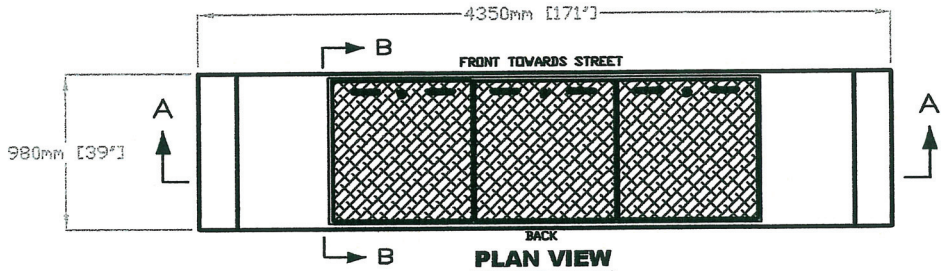

PLAN VIEW

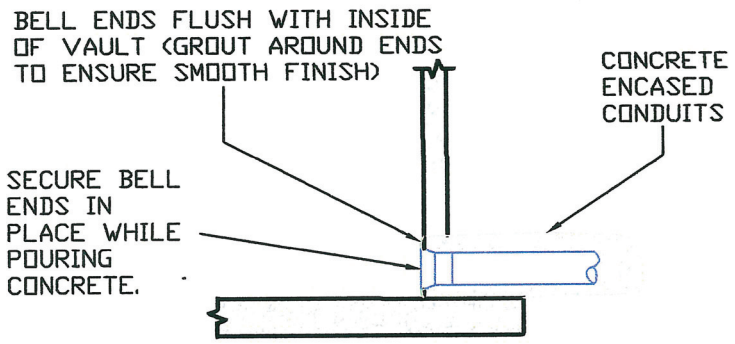

CONDUIT ENTRANCE DETAIL

* See U-J3-2 for vault specifications.
* See U-J3-2B for ground grid & onubstructed area.

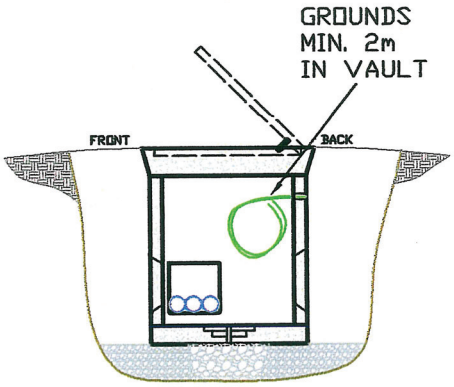

SECTION B - B

* See U-J3-2C for cabling detail.
* See U-J3-2D for installation photos.

NOTES:

1. ESTABLISH BASE WITH 19mm MINUS TO ENSURE THAT TOP OF VAULT MATCHES FINISHED GRADE.
2. BREAK OUT KNOCK OUTS AS REQUIRED AND INSTALL THE CONDUITS AS SHOWN (NO. WILL VARY).
3. INSTALL GROUNDING CONNECTOR AND GROUND RODS AS SHOWN.
4. BACK FILL & COMPACT IN 300mm LIFTS. USE ONLY APPROVED BACKFILL MATERIAL.
5. RESTORE THE SURFACE AT FINISHED GRADE AS REQUIRED IN SPECIFICATIONS.
6. CONTACT ELECTRIC UTILITY TO ENSURE PROPER VAULT INSTALLATION & ORIENTATION OF COLLAR & LID. (COLLAR & LID CAN BE ROTATED ON VAULT BASE).
7. ENSURE THAT VAULT IS LEVEL FRONT TO BACK.
8. ENSURE THAT DRAIN HOLE IS CORED OUT AND IS LOCATED ON THE DOWN SLOPE END OF THE VAULT.
9. VAULT TO BE INSTALLED LENGTHWISE PARALLEL TO CURB UNLESS OTHERWISE SPECIFIED [FOLLOWING GRADE IF DIFFERENCE IN ELEVATION < 1FT. (0.3m)].
   IF DIFFERENCE BETWEEN ENDS > 1 FT., THEN CONTACT ELEC. UTILITY. IN SOME INSTANCES THE COLLAR CAN BE RAISED WITH FORMED CONCRETE TO FOLLOW GRADE (BASE TO REMAIN LEVEL). THIS OPTION NOT TO BE USED IN AREAS WHERE VAULT WILL BE DRIVEN ON.
10. GROUND WIRE ENTRY TO BE FROM BACK OF VAULT (SHOULD BE SAME SIDE AS HINGES OF LID).
11. PULL STRING TO BE INSTALLED IN ALL DUCTS (MCM #8 HYDRO TWINE – BCH SPEC 106-0420 R2).
12. APPROX. 25m OF 2/0 AWGF STRANDED COPPER WILL BE REQUIRED FOR THE ENTIRE GROUND GRID – DO NOT LEAVE ENDS SHORT.

PROFESSIONAL ENGINEER — PROVINCE OF BRITISH COLUMBIA — T. E. BURNS

ENGINEER'S STAMP

DRAWN BY:	E.G.H.
CHK'D. BY:	T.W.A.
APP'D. BY:	T.E.B.
SCALE:	N.T.S.

THE CITY OF Penticton

ELECTRIC UTILITY
DISTRIBUTION STANDARDS

3 PHASE PRIMARY JUNCTION BOX (TYPE 1232) INSTALLATION DETAILS

DATE: DEC. 2007	SEC. U-J3	DWG.# 2A

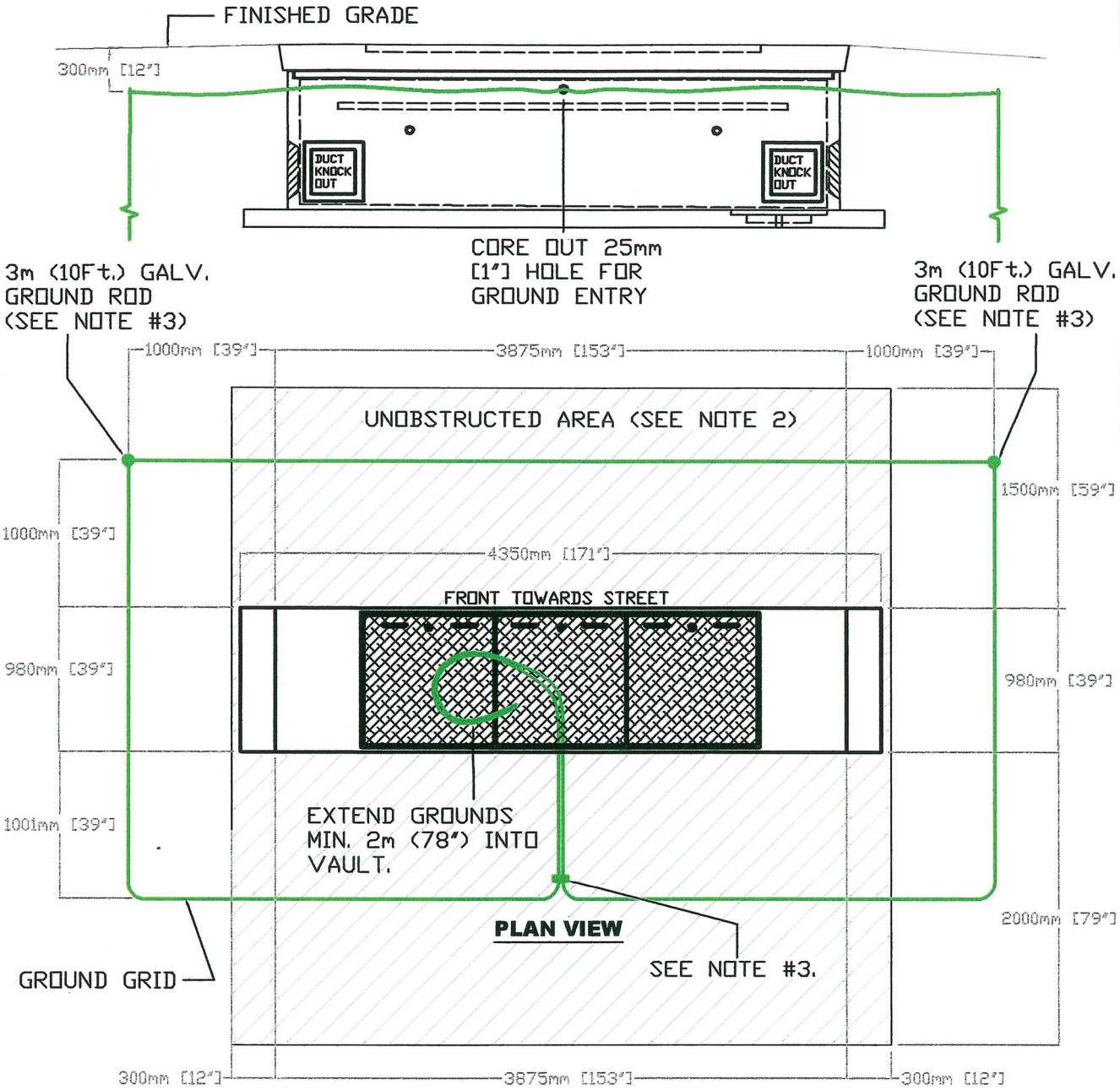

* See U–J3–2 for vault specifications.
* See U–J3–2B for ground grid & onubstructed area.
* See U–J3–2C for cabling details.
* See U–J3–2D for installation photos.

NOTES:

1. TOTAL LENGTH OF ⅜ AWGF STRANDED COPPER IS APPROX. 25m (82 FT.).
2. THE DIMENSIONS OF THE UNOBSTRUCTED AREA ARE MINIMUM CLEARANCES. ANY VEGETATION ON THIS AREA MUST BE OF THE TYPE THAT CAN BE TRIMMED ANNUALLY TO MAINTAIN CLEARANCES. THIS AREA ALLOWS ACCESS FOR OPERATING PERSONNEL.
3. THE CONNECTORS USED FOR THE GROUND GRID MUST BE COPPER AND EITHER COMPRESSION OR CADWELD.

PROFESSIONAL ENGINEER — PROVINCE OF BRITISH COLUMBIA — T. E. BURNS

ENGINEER'S STAMP

DRAWN BY:	E.G.H.
CHK'D. BY:	T.W.A.
APP'D. BY:	T.E.B.
SCALE:	N.T.S.

THE CITY OF Penticton

ELECTRIC UTILITY
DISTRIBUTION STANDARDS

3 PHASE
PRIMARY JUNCTION BOX
(TYPE 1232)
GROUND GRID & UNOBSTRUCTED AREA

DATE: JAN. 2007	SEC. U-J3	DWG.# 2B

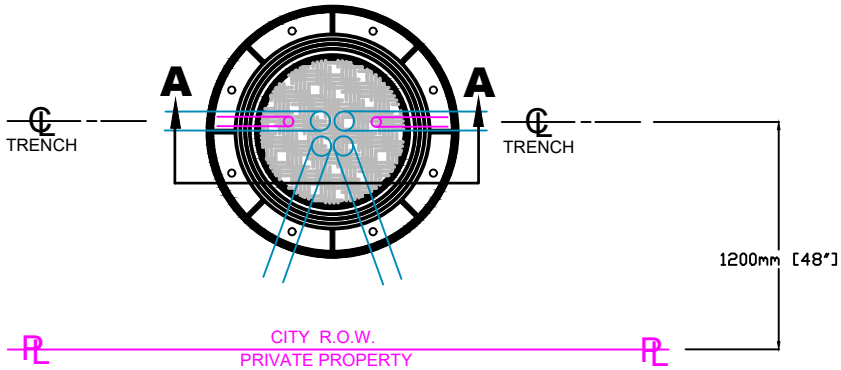

PLAN VIEW

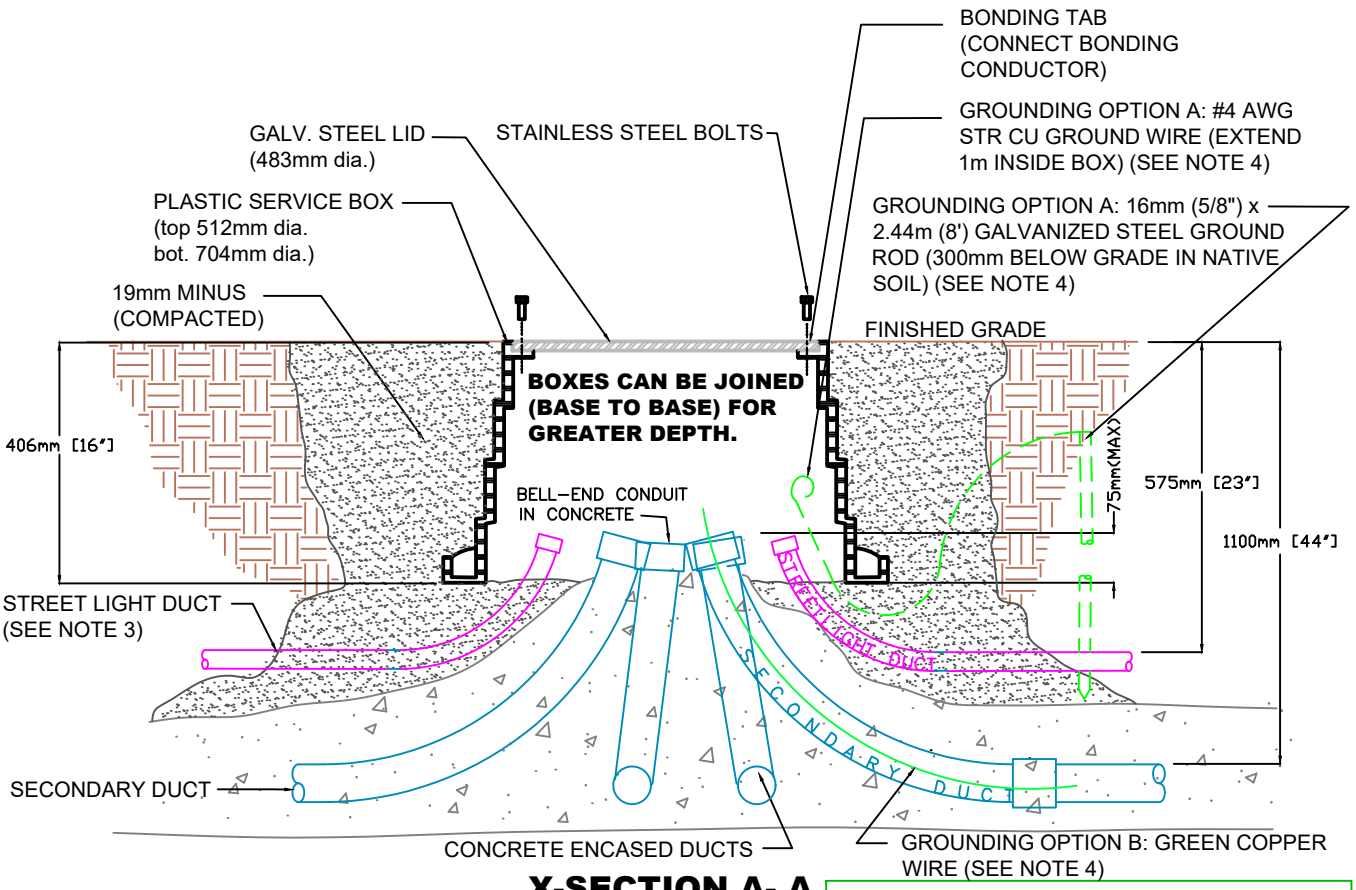

X-SECTION A- A

NOTES
1. INSTALL GALV. STEEL LID ON PLASTIC JUNCTION BOX PRIOR TO BACKFILLING, TAMPING AND PAVING OPERATIONS.
2. INSTALL TOP OF SERVICE BOX FLUSH WITH FINISHED GRADE.
3. STREETLIGHT DUCT IS NOT CONCRETE ENCASED.
4. FOR GROUNDING, ONE OF THE FOLLOWING TWO METHODS IS TO BE CHOSEN:
   - A) THE USE OF A GROUNDING ROD (16mm x 2.44m) AND #4 GREEN CU GROUND WIRE
   - B) THE USE OF GREEN COPPER WIRE (WIRE, CU, RW90-XLPE, 600V, #4 STR, GREEN, 7STR.) IN THE SAME DUCT AS THE SOURCE CONDUCTORS.

ACCEPTABLE PRODUCT

VALMOUNT ENGINEERING
25310 (GALV. STEEL LID, H20 LOADING)
25010 (PLASTIC BOX, H20 LOADING)

NOVA POLE
P28-CO-ST-B00-01 (GALV. STEEL LID, SN1848)
P28-JB-B00-01 (PLASTIC BOX, SN1847R)

ENGINEER'S STAMP	DRAWN BY: N.C.R	THE CITY OF Penticton	ELECTRIC UTILITY DISTRIBUTION STANDARDS
	CHK'D. BY:	SERVICE BOX INSTALLATION DETAIL	
	APP'D. BY:		
	SCALE: N.T.S.	DATE: FEB. 2022 / SEC. U-X	DWG.# 7 R2

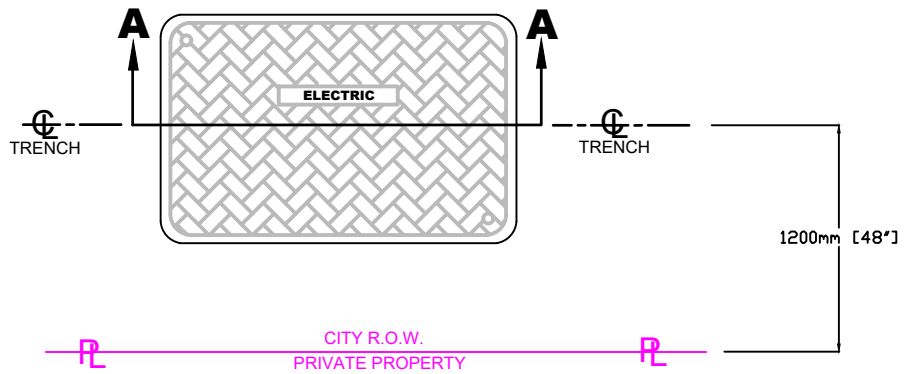

PLAN VIEW

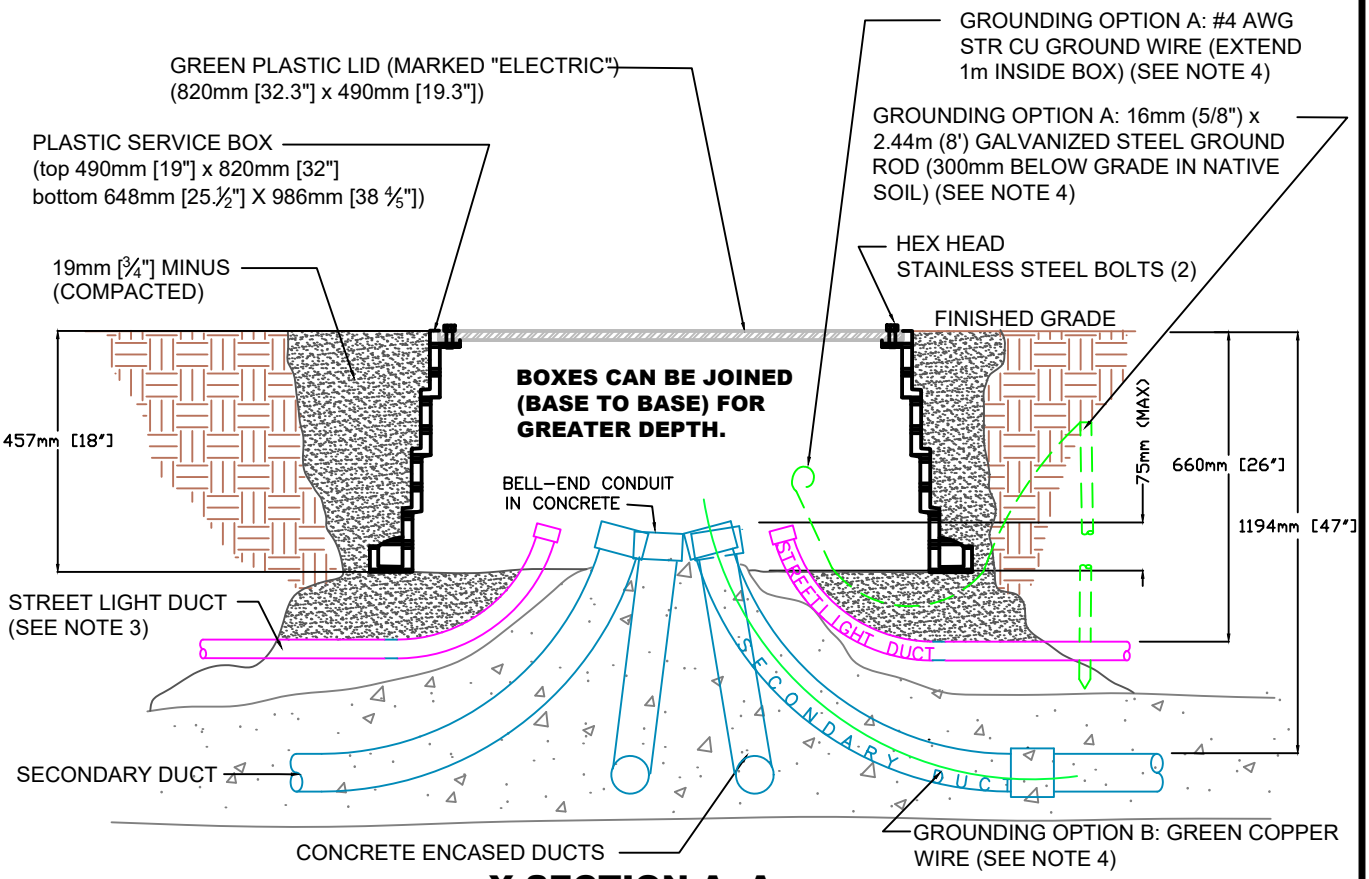

X-SECTION A- A

NOTES
1. INSTALL LID ON PLASTIC JUNCTION BOX PRIOR TO BACKFILLING, TAMPING AND PAVING OPERATIONS.
2. INSTALL TOP OF SERVICE BOX FLUSH WITH FINISHED GRADE.
3. STREETLIGHT DUCT IS NOT CONCRETE ENCASED.
4. FOR GROUNDING, ONE OF THE FOLLOWING TWO METHODS IS TO BE CHOSEN:
   - A) THE USE OF A GROUNDING ROD (16mm x 2.44m) AND #4 GREEN CU GROUND WIRE
   - B) THE USE OF GREEN COPPER WIRE (WIRE, CU, RW90-XLPE, 600V, #4 STR, GREEN, 7STR.) IN THE SAME DUCT AS THE SOURCE CONDUCTORS.

ACCEPTABLE PRODUCT

CHARLES BELOW GRADE ENCLOSURES
P173018ABGTHPEL (black, "ELECTRIC", hex-head bolt)

ENGINEER'S STAMP	DRAWN BY: N.C.R	THE CITY OF Penticton	ELECTRIC UTILITY DISTRIBUTION STANDARDS
	CHK'D. BY:	RECTANGULAR SERVICE BOX INSTALLATION DETAIL	
	APP'D. BY:		
	SCALE: N.T.S.	DATE: JAN. 2024 / SEC. U-X	DWG.# 10 R2

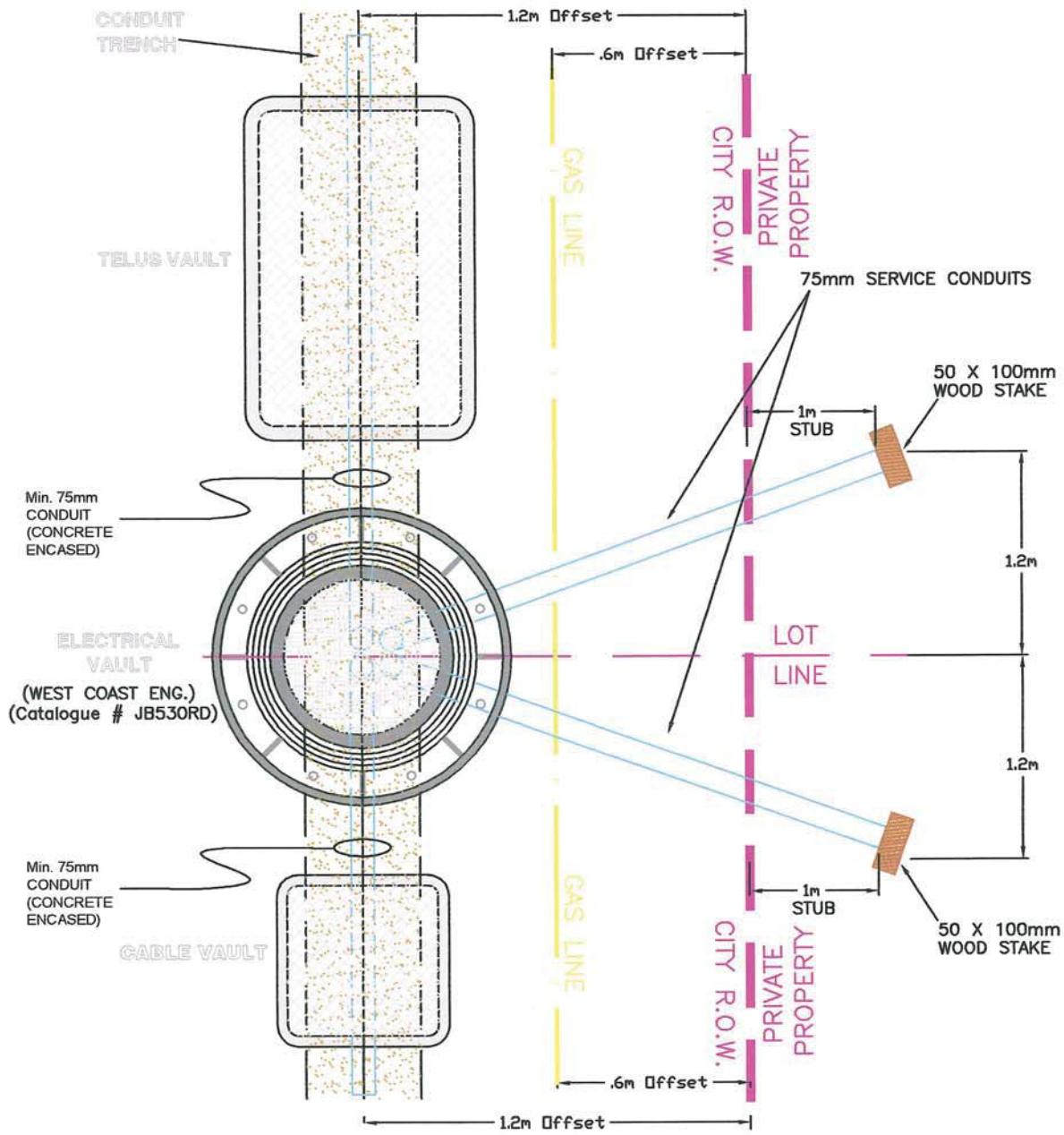

NOTES:
1. ESTABLISH LEVEL BASE WITH 19mm MINUS AND ADJUST TOP OF LID TO MATCH FINISHED GRADE.
2. ROUND P.V.C. VAULT C/W GALVANIZED LID OR CITY ELECTRIC UTILITY APPROVED EQUIVALENT.

PROFESSIONAL ENGINEER — PROVINCE OF BRITISH COLUMBIA — T. E. BURNS

ENGINEER'S STAMP

DRAWN BY:	E.G.H.	THE CITY OF Penticton	ELECTRIC UTILITY DISTRIBUTION STANDARDS
CHK'D. BY:	T.W.A.	STANDARD LOCATIONS FOR TELUS & CABLE T.V. JUNCTION BOXES (WHERE AN ELECTRICAL SERVICE BOX IS USED)	
APP'D. BY:	D.H.E.		
SCALE:	N.T.S.	DATE: NOV. 2004	SEC. U-X	DWG.# 1

SEE DWG. U-E-B-3 FOR BOLLARD DETAIL.

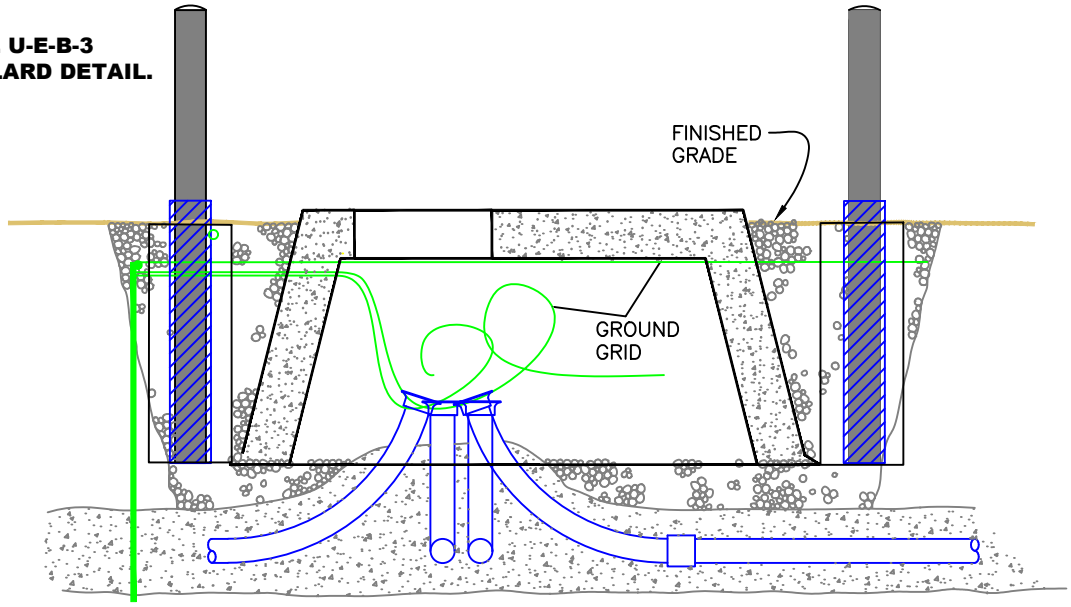

SEE DWG. U-V1-1 FOR PAD INSTALLATION & U-V1-1A FOR PAD SPECIFICATIONS.

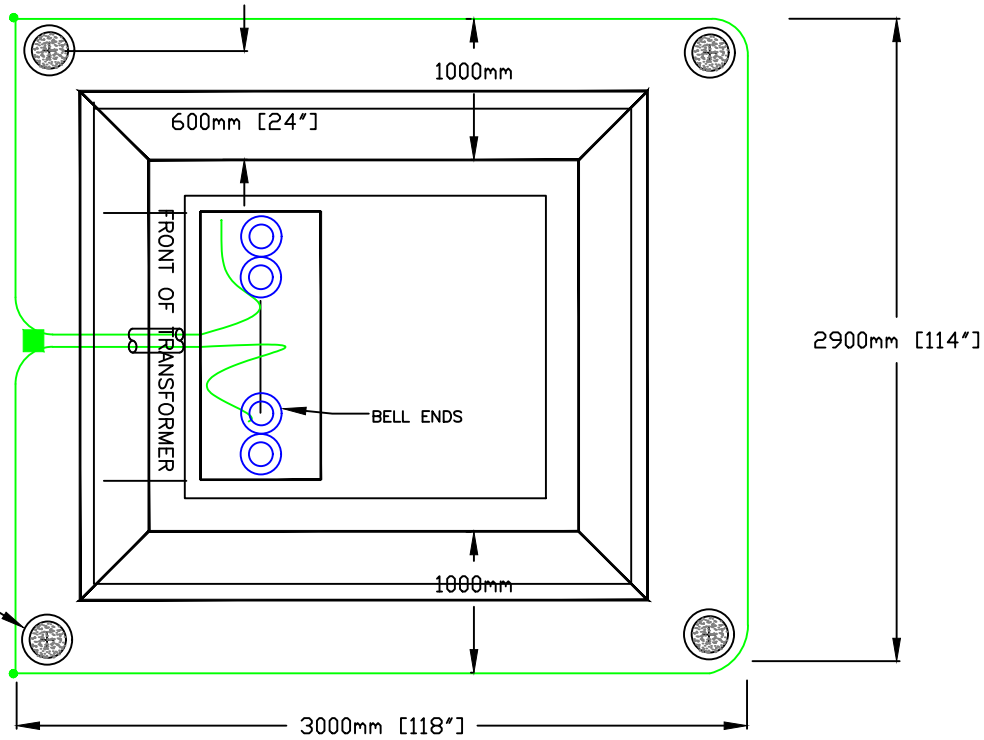

Place bollards inside of ground grid. DO NOT connect to grid.

NOTES:

1. See U-E-B3 for Bollards specification.
2. Dimensions shown are typical, actual dimensions may vary as per the type and size of equipment used. Consult the City Electric Utility for usage, location and number of guard posts required.
3. Ensure that there is adequate space between guard posts and equipment to maintain and operate equipment.

*** APPROX. 20m OF #2/0 AWG CU STR. (BARE) REQUIRED TO COMPLETE ENTIRE GRID.**

ENGINEER'S STAMP	DRAWN BY: N.C.R.	THE CITY OF Penticton	ELECTRIC UTILITY DISTRIBUTION STANDARDS		
	CHK'D. BY:	BOLLARD INSTALLATION FOR 1 PHASE PADMOUNTED EQUIPMENT			
	APP'D. BY:				
	SCALE: N.T.S.	DATE: JULY 2022	SEC. U-E-B	DWG.# 1	

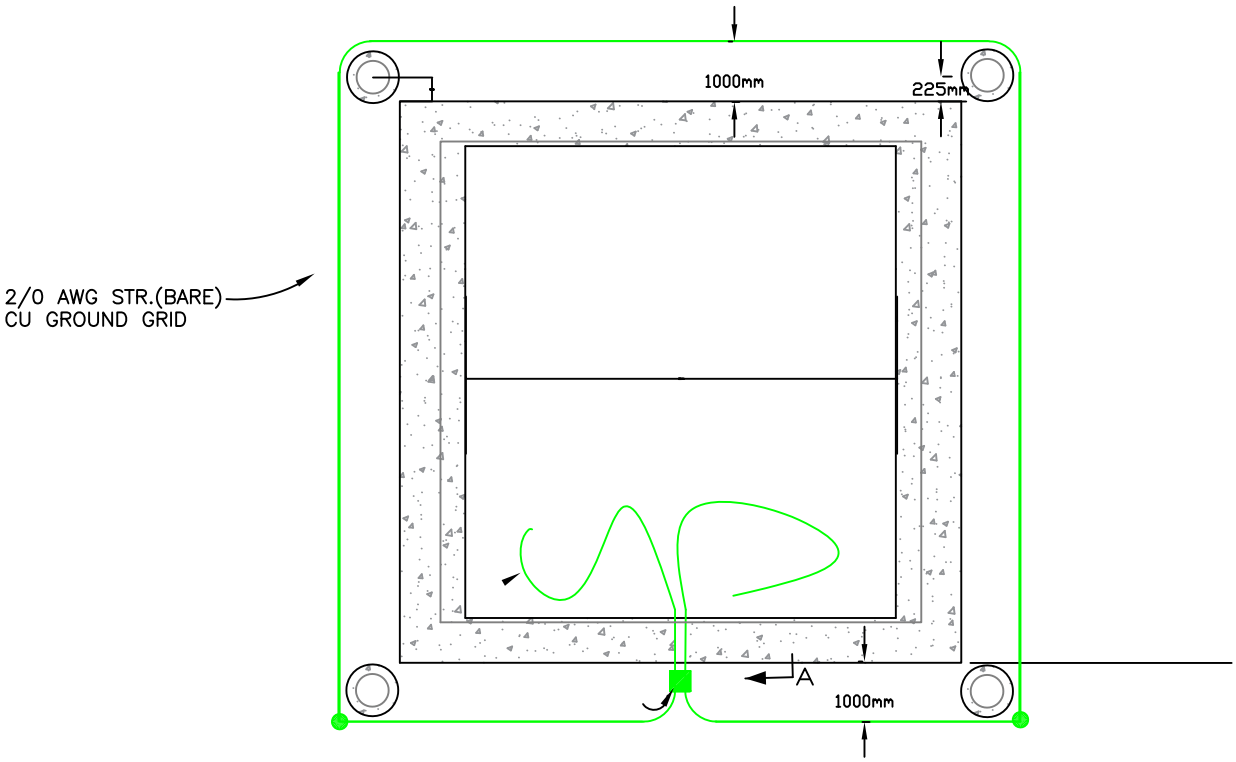

PLAN VIEW

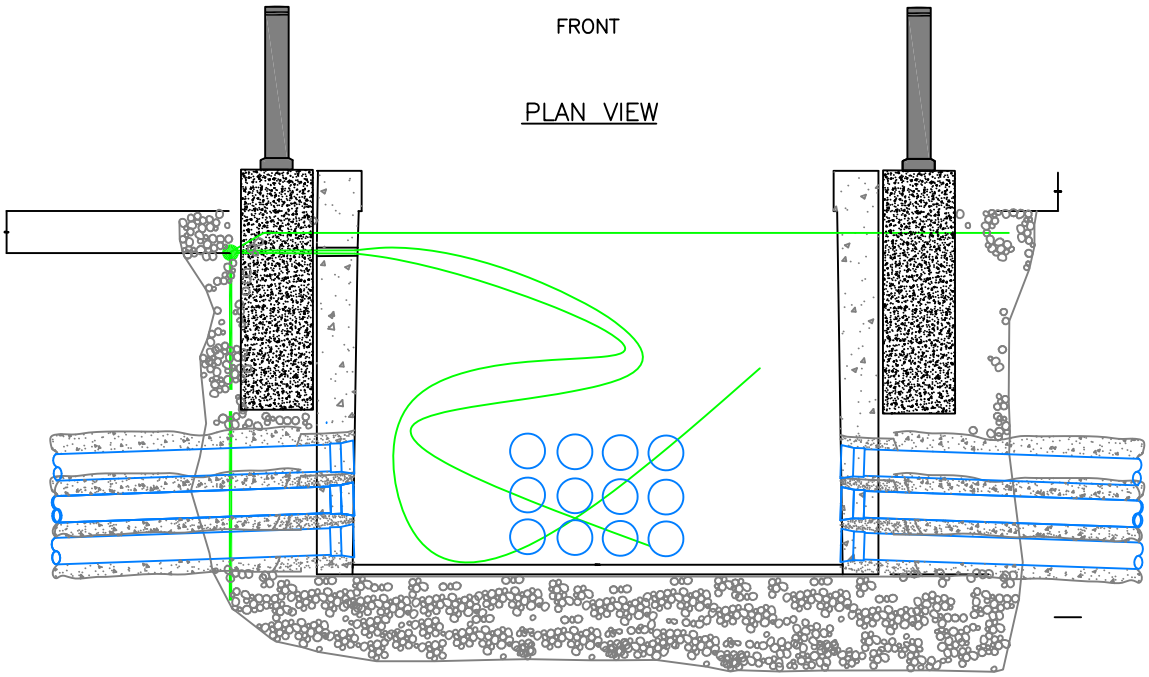

NOTES:

1. See U-E-B3 for Bollards specification
2. Dimensions shown are typical, actual dimensions may vary as per the type and size of equipment used. Consult the City Electric Utility for usage, location and number of guard posts required.
3. Ensure that there is adequate space between guard posts and equipment to maintain and operate equipment.

ENGINEER'S STAMP	DRAWN BY: J.S	THE CITY OF Penticton	ELECTRIC UTILITY DISTRIBUTION STANDARDS		
	CHK'D. BY: J.S.	BOLLARD INSTALLATION FOR THREE PHASE PAD			
	APP'D. BY: S.F.				
	SCALE: N.T.S.	DATE: JAN 2020	SEC. U-E-B	DWG.# 2	

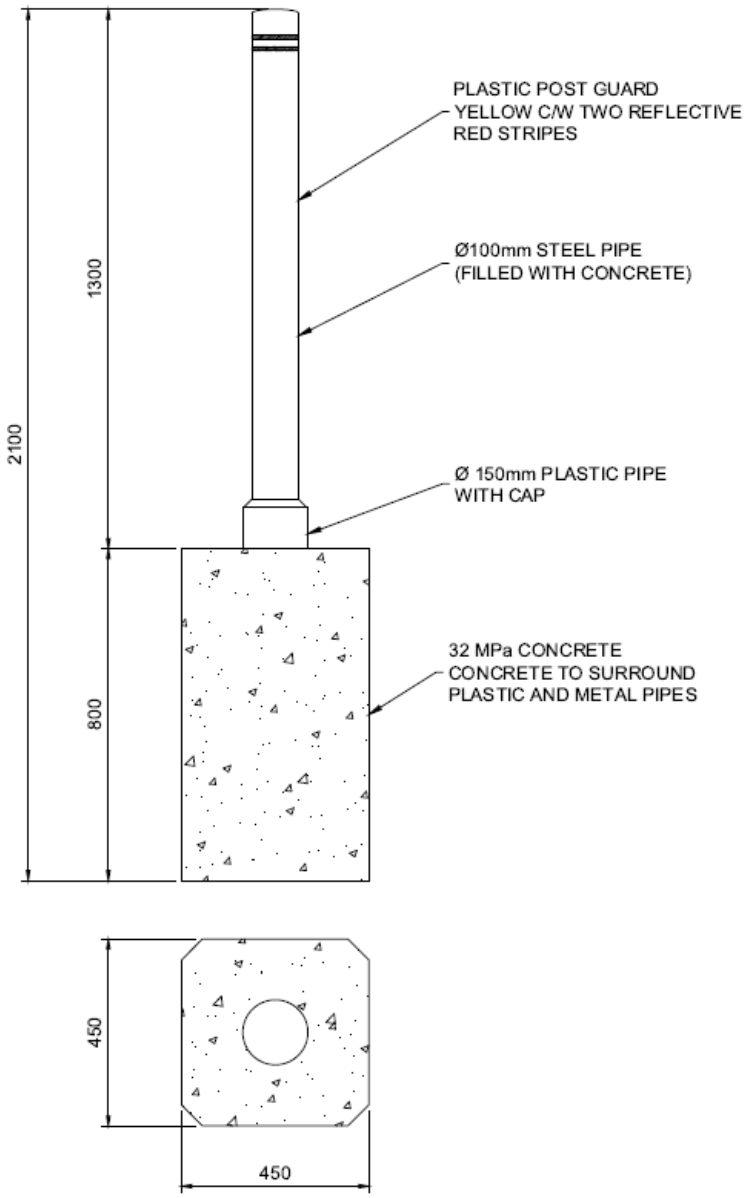

NOTES:

1. THE PLASTIC PIPE OR CONDUIT AND CAP MUST BE INSTALLED TO INSULATE THE PIPE AND THUS PREVENT TRANSFER OF DANGEROUS TOUCH POTENTIAL IN THE EVENT OF THE FAULT.
2. PLASTIC CAP SHALL BE GLUED TO PLASTIC PIPE OR CONDUIT WITH CEMENT TO FORM A WATERPROOF JOINT
3. BOLLARDS SHALL BE PLACED SO AS NOT TO OBSTRUCT ANY DOORS NOR RESTRICT THE OPERATION OF THE UNIT.
4. ALL DIMENSIONS ARE IN MILLIMETERS.
5. PRECASE CONCRETE BASE TO BE 6X6–6/6 RE–ENFORCEMENT MESH.
6. APPROXIMATE WEIGHT: 440 kg

	DRAWN BY: J.S	THE CITY OF Penticton	ELECTRIC UTILITY DISTRIBUTION STANDARDS		
	CHK'D. BY:		BOLLARD DETAIL		
	APP'D. BY: S.F				
ENGINEER'S STAMP	SCALE: N.T.S.	DATE: Jan. 2020	SEC. U-E-B	DWG.# 3	